ITT

Lowara

e-SV™ Series
1, 3, 5, 10, 15, 22, 33, 46, 66, 92, 125

Vertical Multistage
Electric Pumps
equipped with
high efficiency motors

50 Hz

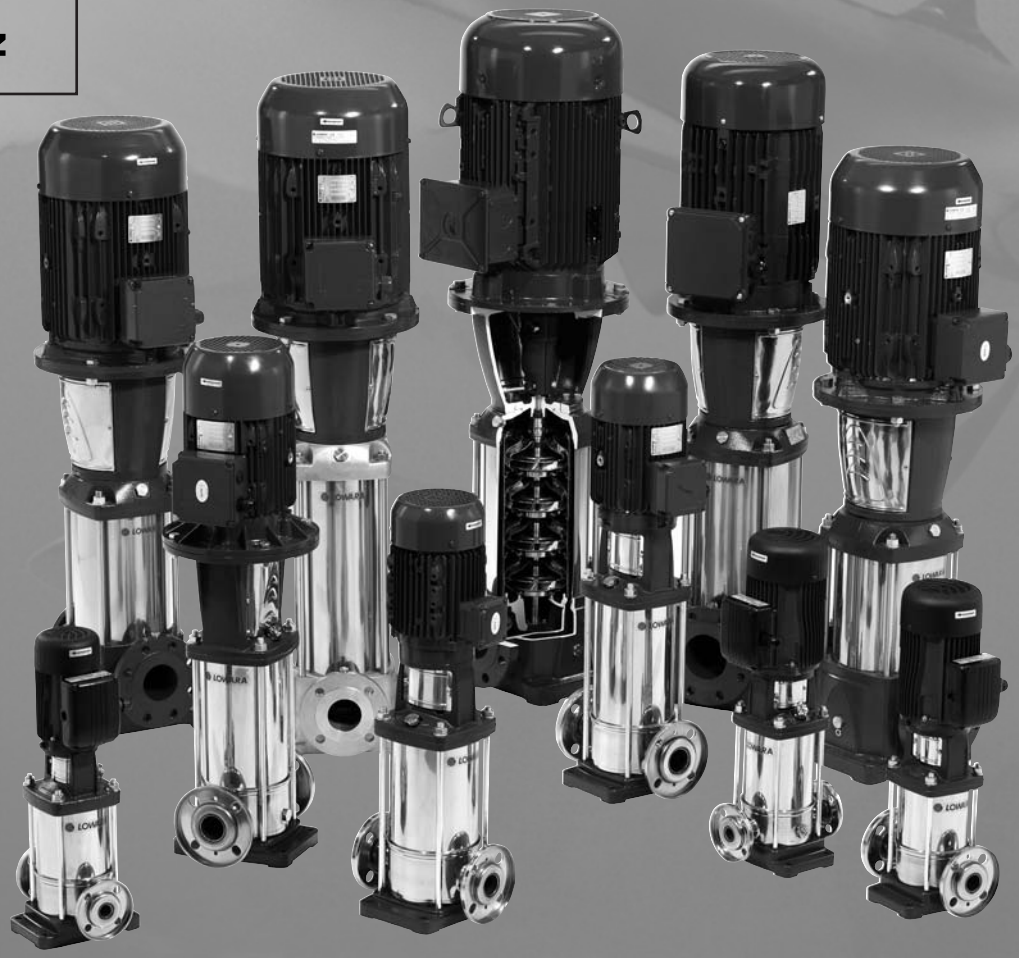

Engineered for life

e-SV™ SERIES
HYDRAULIC PERFORMANCE RANGE AT 50 Hz

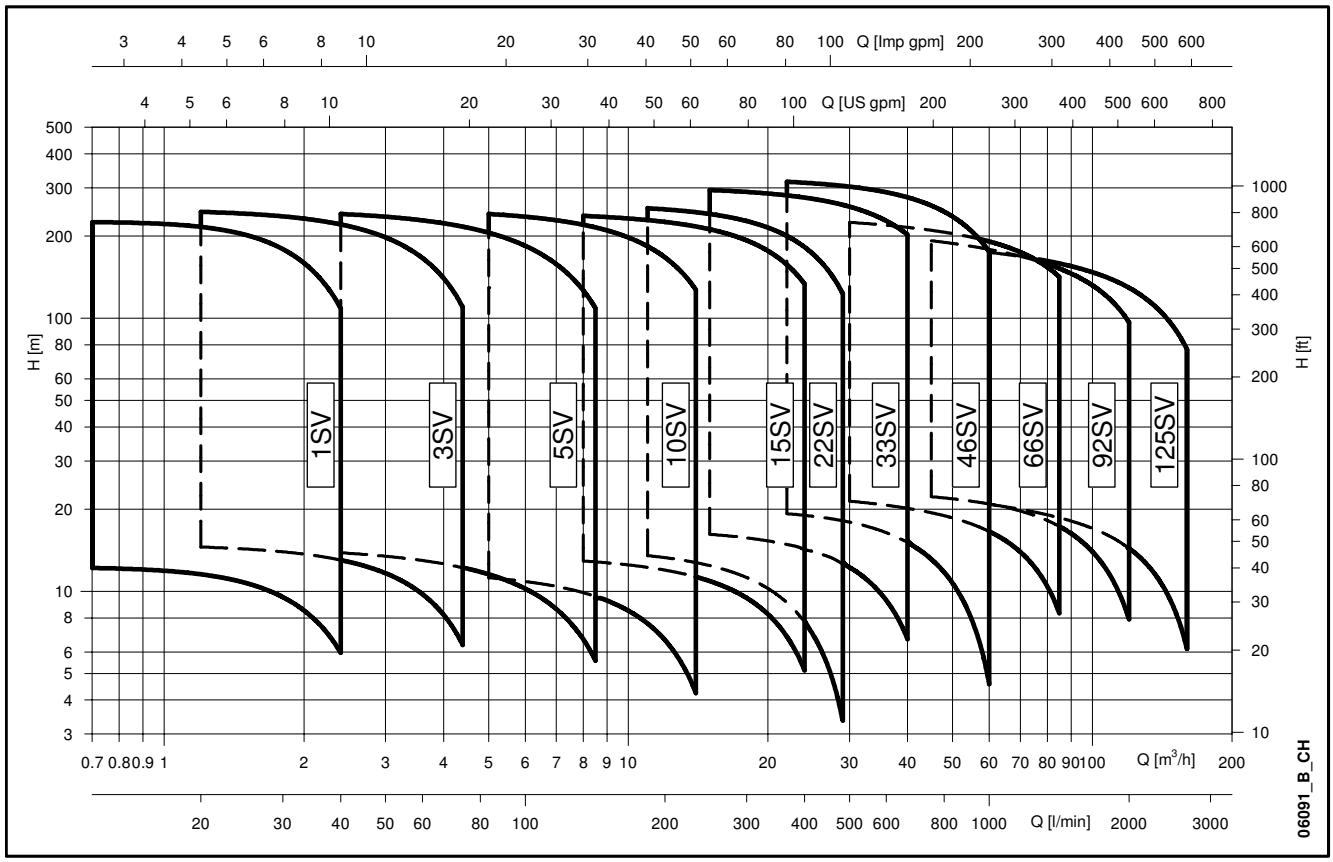

CONTENTS

e-SV™ series specifications 5

Characteristics of 1, 3, 5, 10, 15, 22, 33, 46, 66, 92, 125SV series 6

General characteristics 7

Identification code 8

1, 3, 5SV series and 10, 15, 22SV series ≤ 4 kW, pump cross section and main components 10

10, 15, 22SV series ≥ 5,5 kW, pump cross section and main components 11

33, 46, 66, 92, 125SV series, pump cross section and main components 12

125SV series, pump cross section and main components 13

Mechanical seals 14

Motors 16

SVH series pumps with Hydrovar® control system 18

Typical applications of e-SV™ pumps 20

Hydraulic performance range e-SV™ series at 50 Hz, 2 poles 21

Dimensions and weights at 50 Hz, 2 poles 26

Operating characteristics e-SV™ series at 50 Hz, 2 poles 27

Accessories 51

Special versions 54

Technical appendix 55

ITT

Lowara

Vertical Multistage Electric Pumps

e-SV™ series with high efficiency motors



MARKET SECTORS

CIVIL, AGRICULTURAL, LIGHT INDUSTRY, WATER TREATMENT, HEATING AND AIR CONDITIONING.

APPLICATIONS

- Handling of water, free of suspended solids, in the civil, industrial and agricultural sectors.
- Pressure boosting and water supply systems.
- Irrigation systems.
- Wash systems.
- Water treatment plants.
- Handling of moderately aggressive liquids, demineralised water, water and glycol, etc.
- Circulation of hot and cold water for heating, cooling and conditioning systems.
- Boiler feed.
- Pharmaceutical industries.
- Food & beverage industries.

- ❑ **LIQUID END MADE ENTIRELY OF STAINLESS STEEL IN THE 1, 3, 5, 10, 15, 22 m^3/h STANDARD VERSION**
- ❑ **STANDARD MECHANICAL SEAL CAN BE REPLACED WITHOUT REMOVING THE MOTOR FROM THE PUMP (FOR 10, 15, 22, 33, 46, 66, 92, 125SV)**
- ❑ **STANDARD MOTOR**
- ❑ **CAN BE USED WITH THE HYDROVAR® CONTROL SYSTEM IN ORDER TO MANAGE THE OPERATION OF THE PUMP BASED ON THE SYSTEM CONDITIONS AND SAVE ENERGY**

SPECIFICATIONS

PUMP

The SV pump is a non-self priming vertical multistage pump coupled to a standard motor.
The liquid end, located between the upper cover and the pump casing, is held in place by tie rods. The pump casing is available with different configurations and connection types.

- Delivery: up to **160 m^3/h**.
- Head: up to **330 m**.
- Temperature of pumped liquid:
  - from -30°C to +120°C for standard version.
- Maximum operating **pressure**:
  - 1, 3, 5, 10, 15, 22SV with oval flanges: 16 bar (PN16).
  - 1, 3, 5, 10, 15, 22SV with round flanges or Victaulic®, Clamp or DIN 11851 connections: 25 bar (PN 25).
  - 33, 46SV: 16, 25, 40 bar (PN 16, PN 25 or PN 40).
  - 66, 92, 125SV: 16 or 25 bar (PN 16 or PN 25).
- Tested in compliance with ISO 9906 - Annex A.
- Direction of rotation: clockwise looking at the pump from the top down (marked with an arrow on the adapter and on the coupling).

MOTOR

- Squirrel cage in short circuit, enclosed construction with external ventilation.
- Standard supply Lowara motors up to 22 kW (included) for the 2-pole version. Other motor brands for higher powers.
- **The Lowara SM ≥ 0,75 kW and PLM surface motors have efficiency values that fall within the range normally referred to as efficiency class IE2**.
- IP55 protection.
- Class F insulation.
- Performances according to EN 60034-1.
- Standard voltage:
  - Single-phase version: 220-240 V, 50 Hz.
  - Three-phase version: 220-240/380-415 V, 50 Hz for power up to 3 kW, 380-415/660-690 V, 50 Hz for power above 3 kW.

i-ALERT™

Patented i-ALERT™ monitor continuously measures vibration to support optimum performance.
Available **as standard** on pumps 7,5 kW (10 HP) and above.

CHARACTERISTICS OF 1, 3, 5, 10, 15, 22SV SERIES

- Vertical multistage centrifugal pump. All metal parts in contact with the pumped liquid are made of stainless steel.
- The following versions are available:
  - **F**: round flanges, in-line delivery and suction ports, AISI 304.
  - **T**: oval flanges, in-line delivery and suction ports, AISI 304.
  - **R**: round flanges, delivery port above the suction port, with four adjustable positions, AISI 304.
  - **N**: round flanges, in-line delivery and suction ports, AISI 316.
  - **V**, **P**: Victaulic® couplings, in-line delivery and suction ports, AISI 316.
  - **C**: Clamp couplings (DIN 32676), in-line delivery and suction ports, AISI 316.
  - **K**: threaded couplings, (DIN 11851), in-line delivery and suction ports, AISI 316.
- Reduced axial thrusts enable the use of **standard motors** that are easily found in the market. **The Lowara SM ≥ 0,75 kW and PLM surface motors have efficiency values that fall within the range normally referred to as efficiency class IE2**.
- Mechanical seal according to EN 12756 (ex DIN 24960) and ISO 3069 for 1, 3, 5SV and 10, 15, 22SV (≤ of 4 kW) series.
- **Balanced mechanical seal** according to EN 12756 (ex DIN 24960) and ISO 3069, which **can be replaced without removing the motor from the pump** for 10, 15 and 22SV (≥ of 5,5 kW) series.
- Seal housing chamber designed to prevent the accumulation of air in the critical area next to the mechanical seal.
- A second plug is available for 10, 15, 22SV series.
- Versions with round flanges that can be coupled to counter-flanges, according to EN 1092.
- Threaded, oval counter-flanges made of stainless steel are standard supply for the T versions.
- Round counter-flanges made of stainless steel are available on request for the F, R and N versions.
- Easy maintenance. No special tools required for assembly or disassembly.
- **The pumps for F, T, R, N versions are certified for drinking water use (WRAS and ACS certified)**.
- Standard version for temperatures ranging from -30°C to +120°C.

CHARACTERISTICS OF 33, 46, 66, 92, 125SV SERIES

- The following versions are available:
  - **G**: vertical multistage centrifugal pump with impellers, diffusers and outer sleeve made entirely of stainless steel, and with pump casing and motor adaptor made of cast iron.
  - **N**, **P**: version made entirely of AISI 316 stainless steel.
- Innovative axial load compensation system on pumps with higher head. This ensures reduced axial thrusts and enables the use of **standard motors** that are easily found in the market. **The Lowara surface motors have efficiency values that fall within the range normally referred to as efficiency class IE2**.
- **Balanced mechanical seal** according to EN 12756 (ex DIN 24960) and ISO 3069, which **can be replaced without removing the motor from the pump**.
- Seal housing chamber designed to prevent the accumulation of air in the critical area next to the mechanical seal.
- **The pumps for G, N versions are certified for drinking water use (WRAS and ACS certified)**.
- Standard version for temperatures ranging from -30°C to +120°C.
- Pump body fitted with couplings for installing pressure gauges on both suction and delivery flanges.
- In-line ports with round flanges that can be coupled to counter-flanges, in compliance with EN 1092.
- Mechanical sturdiness and easy maintenance. No special tools required for assembly or disassembly.

Inlet pressure of the pump plus static pressure of the water within the pump cannot exceed the nominal pressure (PN). Using different motors from those provided by Lowara could limit inlet pressure.
In this event please contact customer services.

AVAILABLE ON REQUEST

Special versions are available to suit many applications. For details see page 54.

GENERAL CHARACTERISTICS
2-POLE SV

	1SV	3SV	5SV	10SV	15SV	22SV	33SV	46SV	66SV	92SV	125SV
Max efficiency flow (m³/h)	1,7	3	5,5	10,5	16,5	20,5	31	43	72	90	120
Flow range (m³/h)	0,7÷2,4	1,2÷4,4	2,4÷8,5	5÷14	8÷24	11÷29	15÷40	22÷60	30÷85	45÷120	60÷160
Maximum pressure (bar)	23	25	25	25	25	26	30	36	23	21	22
Motor power (kW)	0,37÷2,2	0,37÷3	0,37÷5.5	0,75÷11	1,1÷15	1,1÷18,5	2,2÷30	3÷45	4÷45	5,5÷45	7,5÷55
Max η (%) of pump	50	60	70	71	72	73	77	79	78	80	78
Standard temperature (°C)	-30 +120										

1-125sv_2p50-en_a_tg

1, 3, 5, 10, 15, 22SV VERSIONS

TYPE		2 POLES 1SV	3SV	5SV	10SV	15SV	22SV
F	AISI 304, PN25. In-line ports, round flanges	•	•	•	•	•	•
T	AISI 304, PN16. In-line ports, oval flanges	•	•	•	•	•	•
R	AISI 304, PN25. Discharge port above suction, round flanges	•	•	•	•	•	•
N	AISI 316, PN25. In-line ports, round flanges	•	•	•	•	•	•
V	AISI 316, PN25. Victaulic® couplings	•	•	•	•	•	•
P	AISI 316, PN40. Victaulic® couplings	•	•	•	•	•	•
C	AISI 316, PN25. Clamp couplings (DIN 32676)	•	•	•	•	•	•
K	AISI 316, PN25. Threaded couplings (DIN 11851)	•	•	•	•	•	•

• = Available. For P versions see specific catalogue.

1-22sv_2p50-en_b_tc

33, 46, 66, 92, 125SV VERSIONS

TYPE		2 POLES SV 33SV	46SV	66SV	92SV	125SV
G	CAST IRON PUMP CASING, LIQUID END MADE OF STAINLESS STEEL, IN-LINE ROUND FLANGES PN16, PN25 OR PN40 DEPENDING ON NUMBER OF STAGES AND MODEL.	•	•	•	•	•
N	ALL AISI 316 STAINLESS STEEL, IN-LINE ROUND FLANGES, PN16, PN25 OR PN40 DEPENDING ON NUMBER OF STAGES AND MODEL.	•	•	•	•	•
P	ALL AISI 316 STAINLESS STEEL. FLANGES,IN-LINE ROUND, PN40.	•	•	•	•	•

• = Available. For P versions see specific catalogue.

33-125sv_2p50-en_a_tc

VERSION DIAGRAM

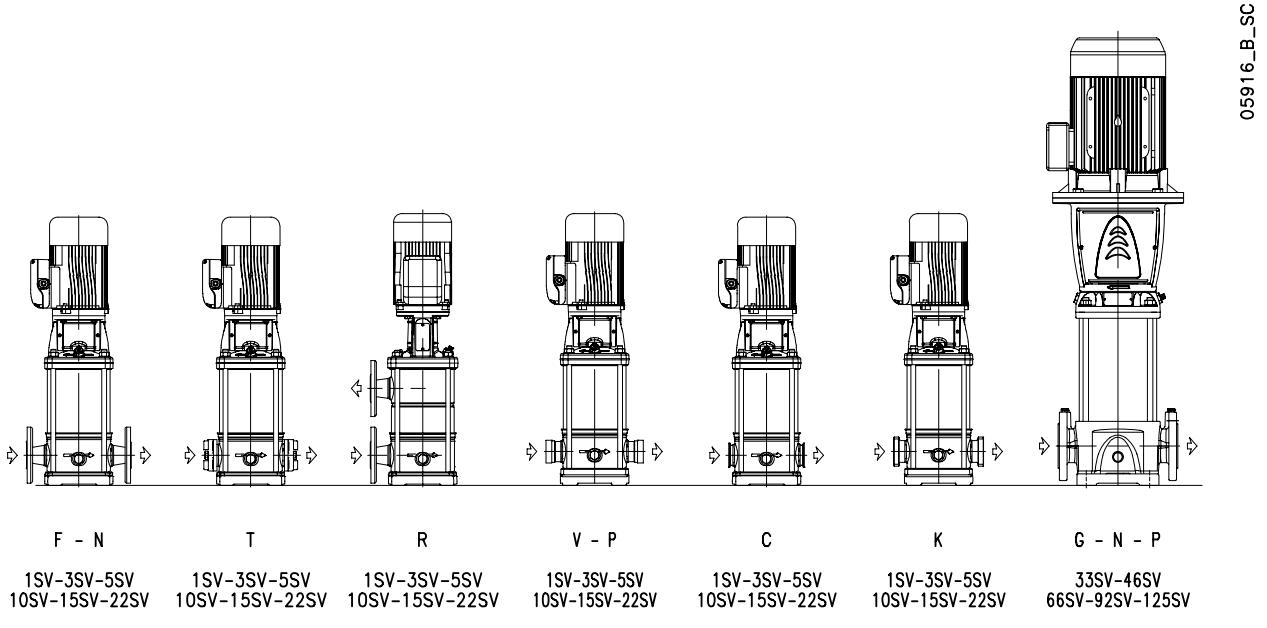

IDENTIFICATION CODE

1, 3, 5, 10, 15, 22SV

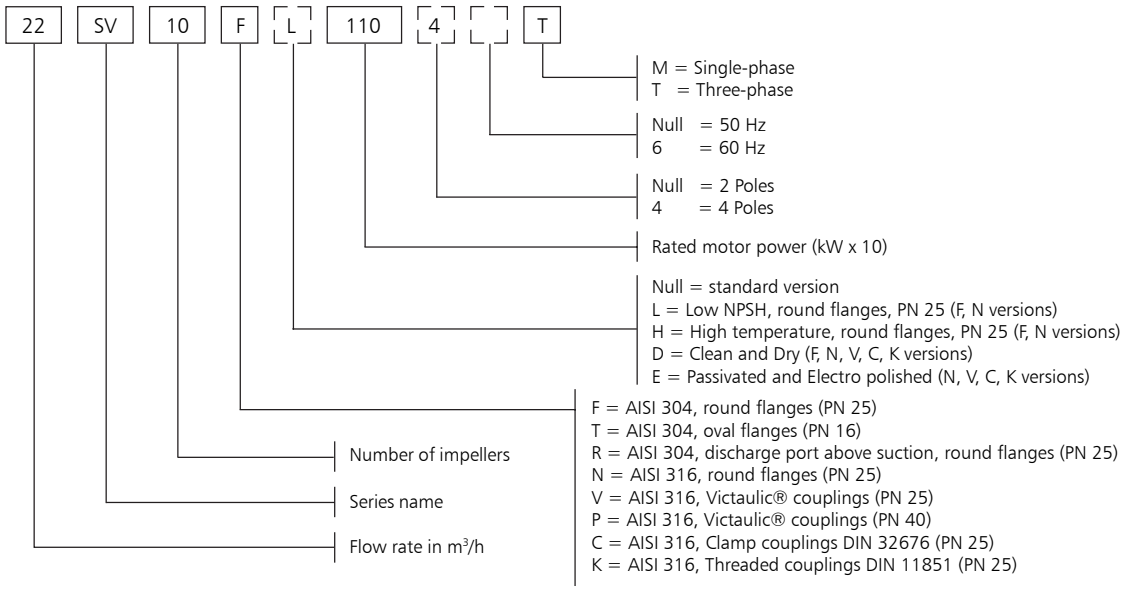

EXAMPLE: 22SV10F110T
SV series electric pump, flow rate 22 m³/h, Number of impellers 10,
F version (AISI 304) round flanges, rated motor power 11 kW, 50 Hz frequency, three-phase.

33, 46, 66, 92, 125SV

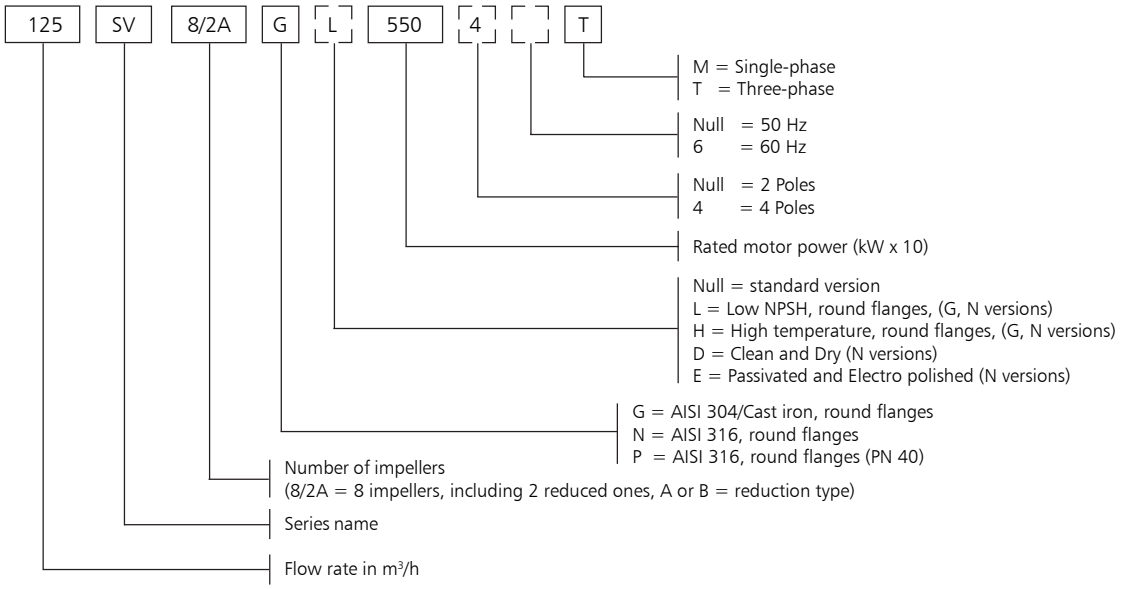

EXAMPLE: 125SV8/2AG550T
SV series electric pump, flow rate 125 m³/h, Number of impellers 8, including 2 reduced ones, A reduction type
G version (AISI 304/Cast iron) round flanges, rated motor power 55 kW, 50 Hz frequency, three-phase.

RATING PLATE

1-22SV (ELECTRIC PUMP)

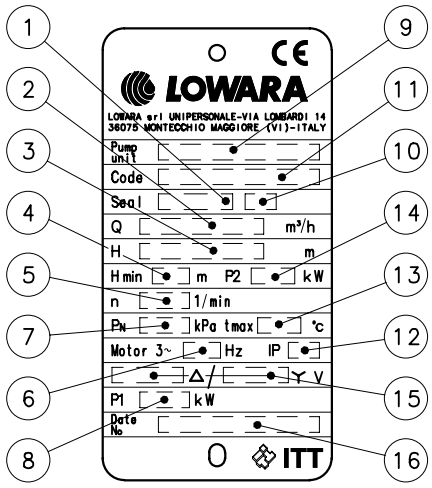

33-125SV (ELECTRIC PUMP)

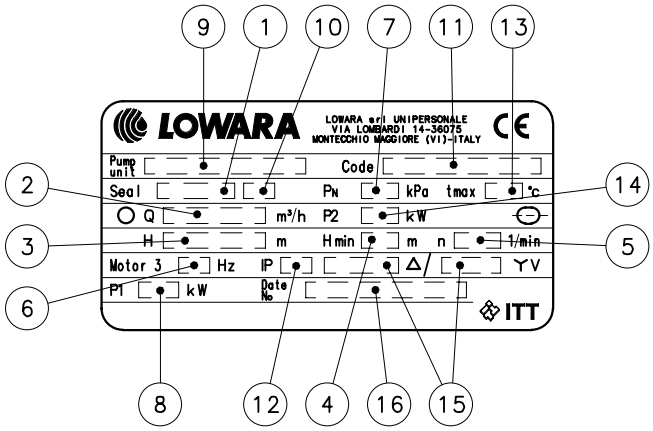

1-22SV (PUMP)

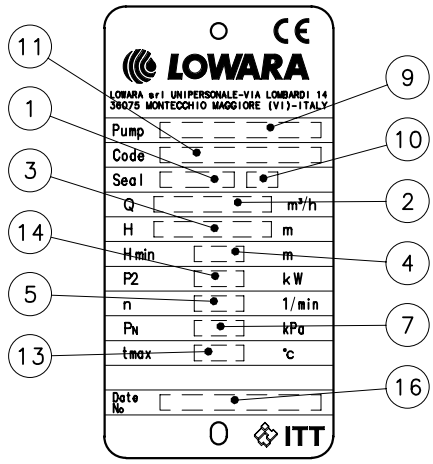

33-125SV (PUMP)

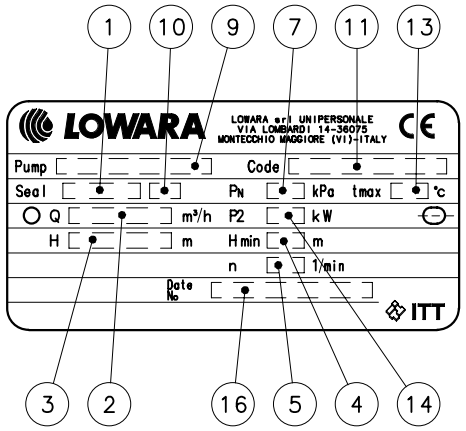

05922_C_SC

LEGEND

1 - Mechanical seal material identification code
2 - Flow range
3 - Head range
4 - Minimum head
5 - Speed
6 - Frequency
7 - Maximum operating pressure
8 - Electric pump unit absorbed power
9 - Pump / electric pump unit type
10 - O-ring material identification code
11 - Electric pump unit / pump code
12 - Protection class
13 - Maximum liquid temperature
14 - Motor nominal power
15 - Rated voltage
16 - Manufacturing date and serial number

1, 3, 5SV SERIES and 10, 15, 22SV SERIES ≤ 4 kW
ELECTRIC PUMP CROSS SECTION AND MAIN COMPONENTS

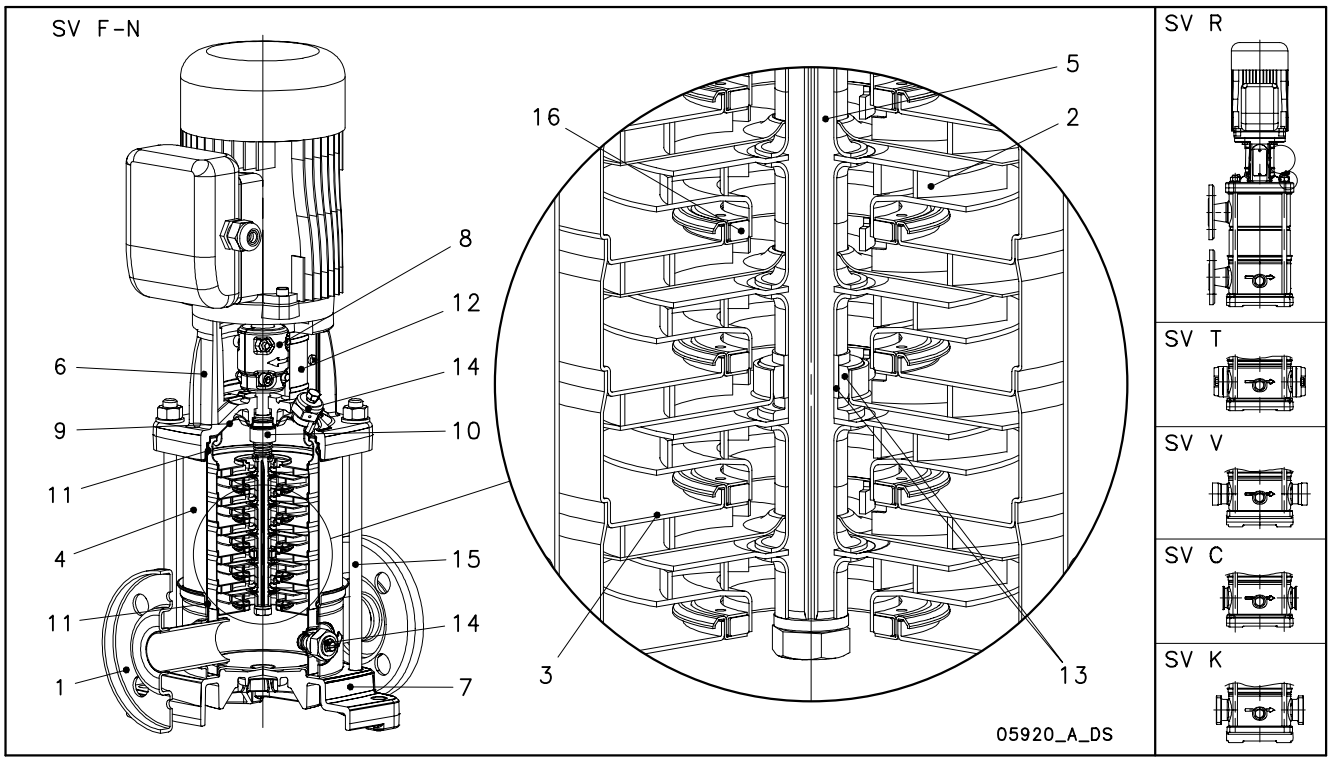

F, T, R VERSIONS

REF. N.	NAME	MATERIAL	REFERENCE STANDARDS	
			EUROPE	USA
1	Pump body	Stainless steel	EN 10088-1-X5CrNi18-10 (1.4301)	AISI 304
2	Impeller	Stainless steel	EN 10088-1-X5CrNi18-10 (1.4301)	AISI 304
3	Diffuser	Stainless steel	EN 10088-1-X5CrNi18-10 (1.4301)	AISI 304
4	Outer sleeve	Stainless steel	EN 10088-1-X5CrNi18-10 (1.4301)	AISI 304
5	Shaft	Stainless steel	EN 10088-1-X5CrNi18-10 (1.4301)	AISI 304
6	Adapter	Cast iron	EN 1561-GJL-250 (JL1040)	ASTM Class 35
7	Base	Aluminium	EN 1706-AC-AlSi11Cu2 (Fe) (AC46100)	-
8	Coupling	Aluminium	EN 1706-AC-AlSi11Cu2 (Fe) (AC46100)	-
9	Seal housing	Stainless steel	EN 10088-1-X5CrNi18-10 (1.4301)	AISI 304
10	Mechanical seal	Silicon carbide / Carbon / EPDM		
11	Elastomers	EPDM		
12	Coupling protection	Stainless steel	EN 10088-1-X5CrNi18-10 (1.4301)	AISI 304
13	Shaft sleeve and bushing	Tungsten carbide		
14	Fill / drain plugs	Stainless steel	EN 10088-1-X5CrNi18-10 (1.4301)	AISI 304
15	Tie rods	Galvanized steel	EN 10277-3-36SMnPb14 (1.0765)	
16	Wear ring	Technopolymer PPS		

1-22sv-ftr-en_a_tm

N, V, C, K VERSIONS

REF. N.	NAME	MATERIAL	REFERENCE STANDARDS	
			EUROPE	USA
1	Pump body	Stainless steel	EN 10088-1-X2CrNiMo17-12-2 (1.4404)	AISI 316L
2	Impeller	Stainless steel	EN 10088-1-X2CrNiMo17-12-2 (1.4404)	AISI 316L
3	Diffuser and upper spacer	Stainless steel	EN 10088-1-X2CrNiMo17-12-2 (1.4404)	AISI 316L
4	Outer sleeve	Stainless steel	EN 10088-1-X2CrNiMo17-12-2 (1.4404)	AISI 316L
5	Shaft	Stainless steel	EN 10088-1-X5CrNiMo17-12-2 (1.4401)	AISI 316
6	Adapter	Cast iron	EN 1561-GJL-250 (JL1040)	ASTM Class 35
7	Base	Aluminium	EN 1706-AC-AlSi11Cu2 (Fe) (AC46100)	-
8	Coupling	Aluminium	EN 1706-AC-AlSi11Cu2 (Fe) (AC46100)	-
9	Seal housing	Stainless steel	EN 10088-1-X2CrNiMo17-12-2 (1.4404)	AISI 316L
10	Mechanical seal	Silicon carbide / Carbon / EPDM		
11	Elastomers	EPDM		
12	Coupling protection	Stainless steel	EN 10088-1-X5CrNi18-10 (1.4301)	AISI 304
13	Shaft sleeve and bushing	Tungsten carbide		
14	Fill / drain plugs	Stainless steel	EN 10088-1-X5CrNiMo17-12-2 (1.4401)	AISI 316
15	Tie rods	Stainless steel	EN 10088-1-X17CrNi16-2 (1.4057)	AISI 431
16	Wear ring	Technopolymer PPS		

1-22sv-nvck-en_a_tm

10, 15, 22SV SERIES ≥ 5,5 kW
ELECTRIC PUMP CROSS SECTION AND MAIN COMPONENTS

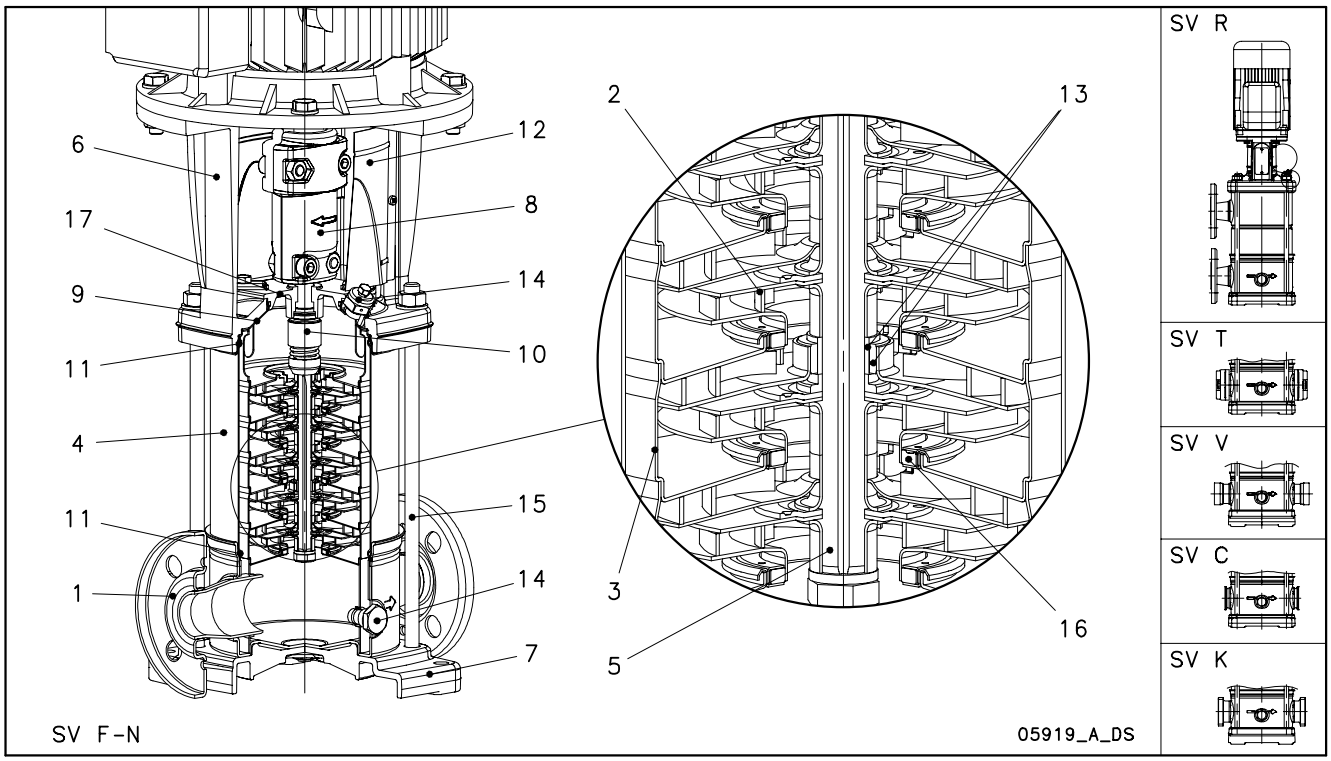

F, T, R VERSIONS

REF. N.	NAME	MATERIAL	REFERENCE STANDARDS	
			EUROPE	USA
1	Pump body	Stainless steel	EN 10088-1-X5CrNi18-10 (1.4301)	AISI 304
2	Impeller	Stainless steel	EN 10088-1-X5CrNi18-10 (1.4301)	AISI 304
3	Diffuser	Stainless steel	EN 10088-1-X5CrNi18-10 (1.4301)	AISI 304
4	Outer sleeve	Stainless steel	EN 10088-1-X5CrNi18-10 (1.4301)	AISI 304
5	Shaft	Stainless steel	EN 10088-1-X5CrNi18-10 (1.4301)	AISI 304
6	Adapter	Cast iron	EN 1561-GJL-250 (JL1040)	ASTM Class 35
7	Base	Aluminium	EN 1706-AC-AlSi11Cu2 (Fe) (AC46100)	-
8	Coupling	Aluminium	EN 1706-AC-AlSi11Cu2 (Fe) (AC46100)	-
9	Seal plate	Stainless steel	EN 10088-1-X5CrNi18-10 (1.4301)	AISI 304
10	Mechanical seal	Silicon carbide / Carbon / EPDM		
11	Elastomers	EPDM		
12	Coupling protection	Stainless steel	EN 10088-1-X5CrNi18-10 (1.4301)	AISI 304
13	Shaft sleeve and bushing	Tungsten carbide		
14	Fill / drain plugs	Stainless steel	EN 10088-1-X5CrNi18-10 (1.4301)	AISI 304
15	Tie rods	Stainless steel	EN 10277-3-36SMnPb14 (1.0765)	
16	Wear ring	Technopolymer PPS		
17	Seal gland	Stainless steel	EN 10213-4-GX5CrNi19-10 (1.4308)	AISI 304

10-22sv-ftr-en_a_tm

N, V, C, K VERSIONS

REF. N.	NAME	MATERIAL	REFERENCE STANDARDS	
			EUROPE	USA
1	Pump body	Stainless steel	EN 10088-1-X2CrNiMo17-12-2 (1.4404)	AISI 316L
2	Impeller	Stainless steel	EN 10088-1-X2CrNiMo17-12-2 (1.4404)	AISI 316L
3	Diffuser	Stainless steel	EN 10088-1-X2CrNiMo17-12-2 (1.4404)	AISI 316L
4	Outer sleeve	Stainless steel	EN 10088-1-X2CrNiMo17-12-2 (1.4404)	AISI 316L
5	Shaft	Stainless steel	EN 10088-1-X5CrNiMo17-12-2 (1.4401)	AISI 316
6	Adapter	Cast iron	EN 1561-GJL-250 (JL1040)	ASTM Class 35
7	Base	Aluminium	EN 1706-AC-AlSi11Cu2 (Fe) (AC46100)	-
8	Coupling	Aluminium	EN 1706-AC-AlSi11Cu2 (Fe) (AC46100)	-
9	Seal plate	Stainless steel	EN 10088-1-X2CrNiMo17-12-2 (1.4404)	AISI 316L
10	Mechanical seal	Silicon carbide / Carbon / EPDM		
11	Elastomers	EPDM		
12	Coupling protection	Stainless steel	EN 10088-1-X5CrNi18-10 (1.4301)	AISI 304
13	Shaft sleeve and bushing	Tungsten carbide		
14	Fill / drain plugs	Stainless steel	EN 10088-1-X5CrNiMo17-12-2 (1.4401)	AISI 316
15	Tie rods	Stainless steel	EN 10088-1-X17CrNi16-2 (1.4057)	AISI 431
16	Wear ring	Technopolymer PPS		
17	Seal gland	Stainless steel	EN 10213-4-GX5CrNiMo19-11-2 (1.4408)	AISI 316

10-22sv-nvck-en_a_tm

33, 46, 66, 92SV SERIES
ELECTRIC PUMP CROSS SECTION AND MAIN COMPONENTS

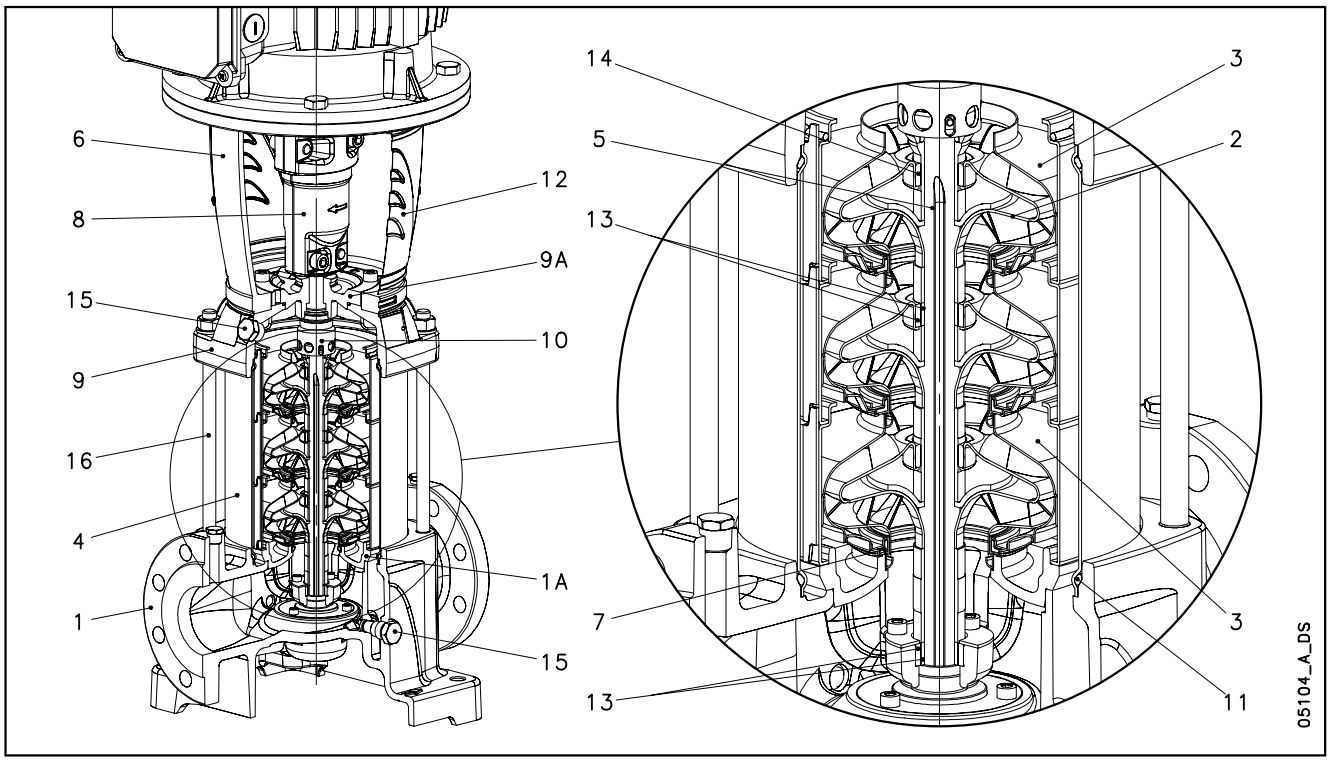

G VERSIONS

REF. N.	NAME	MATERIAL	REFERENCE STANDARDS	
			EUROPE	USA
1	Pump body	Cast iron	EN 1561-GJL-250 (JL1040)	ASTM Class 35
1A	Lower support	Cast iron	EN 1561-GJL-250 (JL1040)	ASTM Class 35
2	Impeller	Stainless steel	EN 10088-1-X2CrNiMo17-12-2 (1.4404)	AISI 316L
3	Diffuser	Stainless steel	EN 10088-1-X5CrNi18-10 (1.4301)	AISI 304
4	Outer sleeve	Stainless steel	EN 10088-1-X5CrNi18-10 (1.4301)	AISI 304
5	Shaft	Stainless steel	EN 10088-1 - X17CrNi16-2 (1.4057)	AISI 431
6	Adapter	Cast iron	EN 1561-GJL-200 (JL1030)	ASTM Class 25
7	Wear ring	Technopolymer PPS		
8	Coupling	Cast iron	EN 1561-GJL-200 (JL1030)	ASTM Class 25
9	Upper head	Cast iron	EN 1561-GJL-250 (JL1040)	ASTM Class 35
9A	Seal housing	Cast iron	EN 1561-GJL-250 (JL1040)	ASTM Class 35
10	Mechanical seal	Silicon carbide / Carbon / EPDM		
11	Elastomers	EPDM		
12	Coupling protection	Stainless steel	EN 10088-1-X5CrNi18-10 (1.4301)	AISI 304
13	Shaft sleeve and bushing	Tungsten carbide		
14	Bushing for diffuser	Carbon		
15	Fill / Drain plugs	Stainless steel	EN 10088-1-X5CrNiMo17-12-2 (1.4401)	AISI 316
16	Tie rods	Galvanized steel	EN 10277-3-36SMnPb14 (1.0765)	-

33-92sv-g-en_a_tm

N VERSIONS

REF. N.	NAME	MATERIAL	REFERENCE STANDARDS	
			EUROPE	USA
1	Pump body	Stainless steel	EN 10213-4-GX5CrNiMo19-11-2 (1.4408)	ASTM CF8M (AISI 316 cast)
1A	Lower support	Stainless steel	EN 10213-4-GX5CrNiMo19-11-2 (1.4408)	ASTM CF8M (AISI 316 cast)
2	Impeller	Stainless steel	EN 10088-1-X2CrNiMo17-12-2 (1.4404)	AISI 316L
3	Diffuser	Stainless steel	EN 10088-1-X2CrNiMo17-12-2 (1.4404)	AISI 316L
4	Outer sleeve	Stainless steel	EN 10088-1-X2CrNiMo17-12-2 (1.4404)	AISI 316L
5	Shaft	Duplex stainless steel	EN 10088-1-X2CrNiMoN22-5-3 (1.4462)	UNS S 31803
6	Adapter	Cast iron	EN 1561-GJL-200 (JL1030)	ASTM Class 25
7	Wear ring	Technopolymer PPS		
8	Coupling	Cast iron	EN 1561-GJL-200 (JL1030)	ASTM Class 25
9	Upper head	Stainless steel	EN 10213-4-GX5CrNiMo19-11-2 (1.4408)	ASTM CF8M (AISI 316 cast)
9A	Seal housing	Stainless steel	EN 10213-4-GX5CrNiMo19-11-2 (1.4408)	ASTM CF8M (AISI 316 cast)
10	Mechanical seal	Silicon carbide / Carbon / EPDM		
11	Elastomers	EPDM		
12	Coupling protection	Stainless steel	EN 10088-1-X5CrNi18-10 (1.4301)	AISI 304
13	Shaft sleeve and bushing	Tungsten carbide		
14	Bushing for diffuser	Carbon		
15	Fill / drain / air plugs	Stainless steel	EN 10088-1-X5CrNiMo17-12-2 (1.4401)	AISI 316
16	Tie rods	Stainless steel	EN 10088-1-X17CrNi16-2 (1.4057)	AISI 431

33-92sv-n-en_a_tm

125SV SERIES
ELECTRIC PUMP CROSS SECTION AND MAIN COMPONENTS

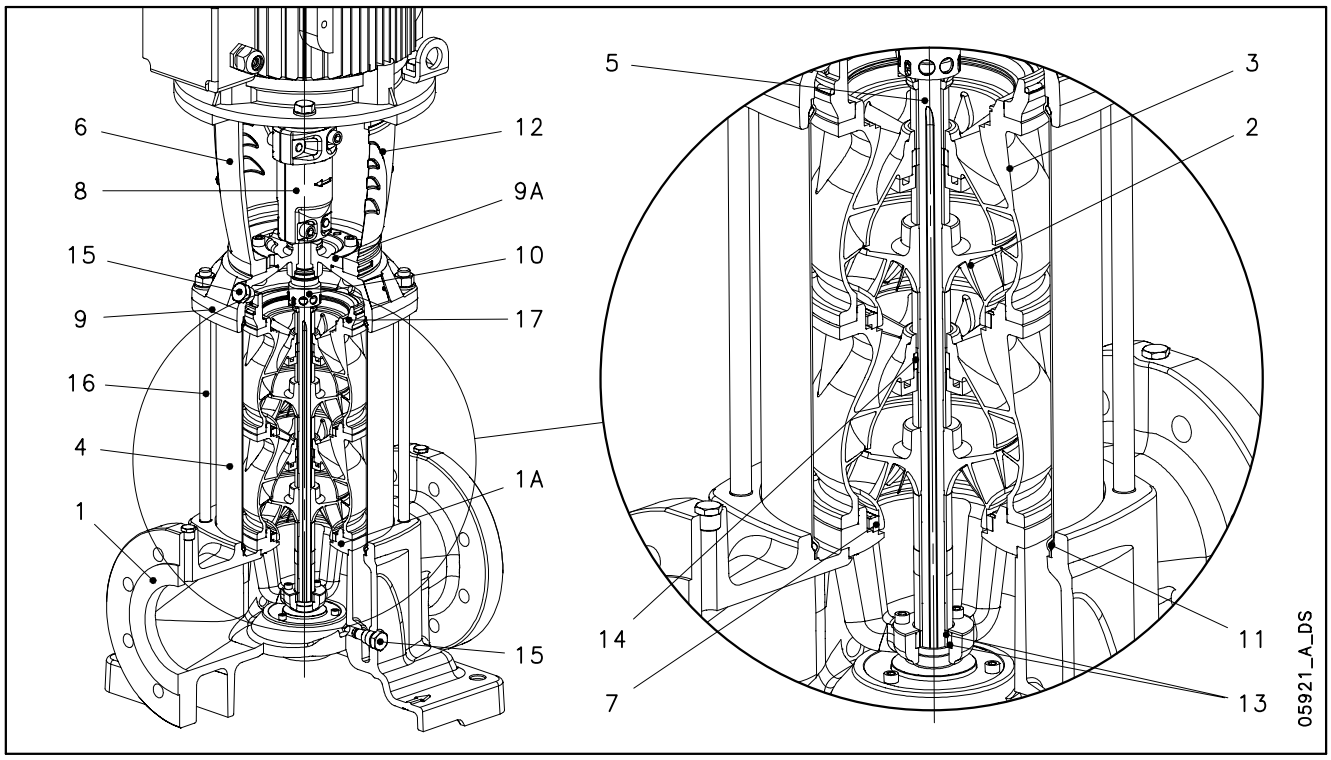

G VERSIONS

REF. N.	NAME	MATERIAL	REFERENCE STANDARDS	
			EUROPE	USA
1	Pump body	Cast iron	EN 1561-GJL-250 (JL1040)	ASTM Class 35
1A	Lower support	Stainless steel	EN 10213-GX5CrNi19-10 (1.4308)	AISI 304
2-3	Impeller, Diffuser	Stainless steel	EN 10213-GX5CrNi19-10 (1.4308)	AISI 304
4	Outer sleeve	Stainless steel	EN 10088-1-X5CrNi18-10 (1.4301)	AISI 304
5	Shaft	Stainless steel	EN 10088-1 - X17CrNi16-2 (1.4057)	AISI 431
6	Adapter (up to 45kW)	Cast iron	EN 1561-GJL-200 (JL1030)	ASTM Class 25
	Adapter (for higher powers)	Cast iron	EN 1563-GJS-500-7 (JS1050)	ASTM A 536 80-55-06
7	Wear ring	Technopolymer PPS		
8	Coupling (up to 45kW)	Cast iron	EN 1561-GJL-200 (JL1030)	ASTM Class 25
	Coupling (for higher powers)	Cast iron	EN 1563-GJS-500-7 (JS1050)	ASTM A 536 80-55-06
9-9A	Upper head, Seal housing	Cast iron	EN 1561-GJL-250 (JL1040)	ASTM Class 35
10	Mechanical seal	Silicon carbide / Carbon / EPDM		
11	Elastomers	EPDM		
12	Coupling protection	Stainless steel	EN 10088-1-X5CrNi18-10 (1.4301)	AISI 304
13	Shaft sleeve and bushing	Tungsten carbide		
14	Bushing for diffuser	Carbon		
15	Fill / drain / air plugs	Stainless steel	EN 10088-1-X5CrNiMo17-12-2 (1.4401)	AISI 316
16	Tie rods	Galvanized steel	EN 10277-3-36SMnPb14 (1.0765)	-
17	Adapter ring	Stainless steel	EN 10213-GX5CrNi19-10 (1.4308)	AISI 304

125sv-g-en_a_tm

N VERSIONS

REF. N.	NAME	MATERIAL	REFERENCE STANDARDS	
			EUROPE	USA
1	Pump body	Stainless steel	EN 10213-4-GX5CrNiMo19-11-2 (1.4408)	ASTM CF8M (AISI 316)
1A	Lower support	Stainless steel	EN 10213-4-GX5CrNiMo19-11-2 (1.4408)	ASTM CF8M (AISI 316)
2-3	Impeller, Diffuser	Stainless steel	EN 10213-4-GX5CrNiMo19-11-2 (1.4408)	ASTM CF8M (AISI 316)
4	Outer sleeve	Stainless steel	EN 10088-1-X2CrNiMo17-12-2 (1.4404)	AISI 316L
5	Shaft	Duplex stainless steel	EN 10088-1-X2CrNiMoN22-5-3 (1.4462)	UNS S 31803
6	Adapter	Cast iron	EN 1561-GJL-200 (JL1030)	ASTM Class 25
	Adapter	Cast iron	EN 1563-GJS-500-7 (JS1050)	
7	Wear ring	Technopolymer PPS		
8	Coupling	Cast iron	EN 1561-GJL-200 (JL1030)	ASTM Class 25
	Coupling	Cast iron	EN 1563-GJS-500-7 (JS1050)	
9-9A	Upper head, Seal housing	Stainless steel	EN 10213-4-GX5CrNiMo19-11-2 (1.4408)	ASTM CF8M (AISI 316)
10	Mechanical seal	Silicon carbide / Carbon / EPDM		
11	Elastomers	EPDM		
12	Coupling protection	Stainless steel	EN 10088-1-X5CrNi18-10 (1.4301)	AISI 304
13	Shaft sleeve and bushing	Tungsten carbide		
14	Bushing for diffuser	Carbon		
15	Fill / drain / air plugs	Stainless steel	EN 10088-1-X5CrNiMo17-12-2 (1.4401)	AISI 316
16	Tie rods	Stainless steel	EN 10088-1-X17CrNi16-2 (1.4057)	AISI 431
17	Adapter ring	Stainless steel	EN 10213-4-GX5CrNiMo19-11-2 (1.4408)	ASTM CF8M (AISI 316)

125sv-n-en_a_tm

e-SV™ SERIES
MECHANICAL SEALS, ACCORDING TO EN 12756

1, 3, 5SV
10, 15, 22SV ≤ 4 kW

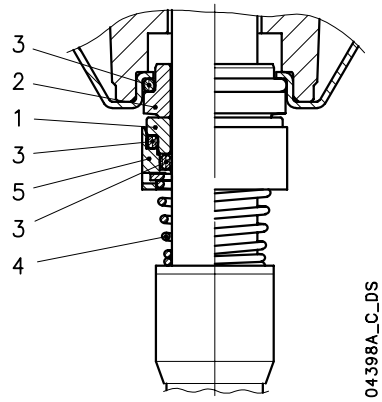

10, 15, 22SV ≥ 5,5 kW

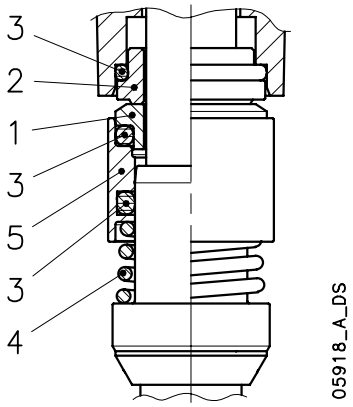

33, 46, 66, 92, 125SV

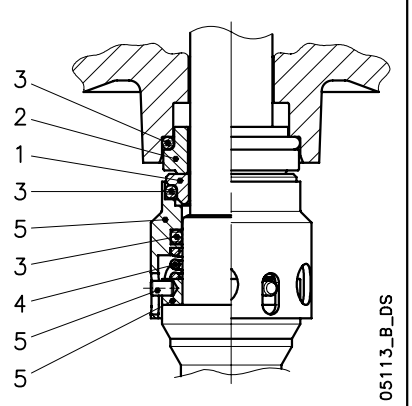

LIST OF MATERIALS

POSITION 1 - 2	POSITION 3	POSITION 4 - 5
Q_1 : Silicon Carbide	E : EPDM	G : AISI 316
B : Resin impregnated carbon	V : FPM	
C : Special resin impregnated carbon	T : PTFE	

TYPE OF SEAL

sv_ten-mec-en_a_tm

TYPE	POSITION 1 ROTATING PART	POSITION 2 STATIONARY PART	POSITION 3 ELASTOMERS	POSITION 4 SPRINGS	POSITION 5 OTHER COMPONENTS	TEMPERATURE (°C)
STANDARD MECHANICAL SEAL						
Q_1 B E G G	Q_1	B	E	G	G	-30 +120
OTHER TYPES OF AVAILABLE MECHANICAL SEAL						
Q_1 Q_1 E G G	Q_1	Q_1	E	G	G	-30 +120
Q_1 B V G G	Q_1	B	V	G	G	-10 +120
Q_1 Q_1 V G G	Q_1	Q_1	V	G	G	-10 +120
*Q_1 C T G G	Q_1	C	T	G	G	0 +120
*Q_1 Q_1 T G G	Q_1	Q_1	T	G	G	0 +120

* Versions with anti-rotation lock pin of the fixed part.

sv_tipi-ten-mec-en_b_tc

PRESSURE/TEMPERATURE APPLICATION LIMITS FOR COMPLETE PUMP (APPLICABLE WITH ANY OF THE SEALS LISTED ABOVE)

① 1-2-3-5-10-15-22 SV T
② 1-2-3-5-10-15-22 SV F-N-R
③ 33-46-66-92-125 SV N

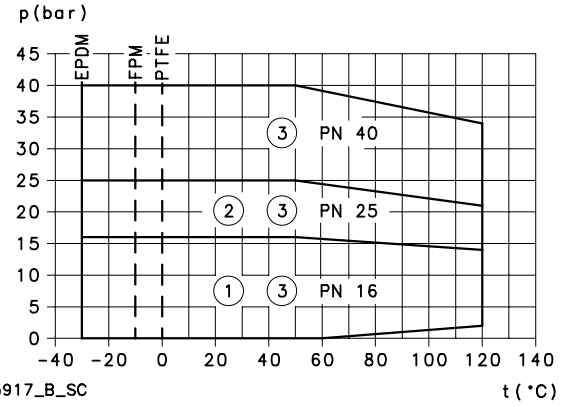

④ 1-3-5-10-15-22 SV C-K
⑤ 1-3-5-10-15-22 SV V
⑥ 33-46-66-92-125 SV G

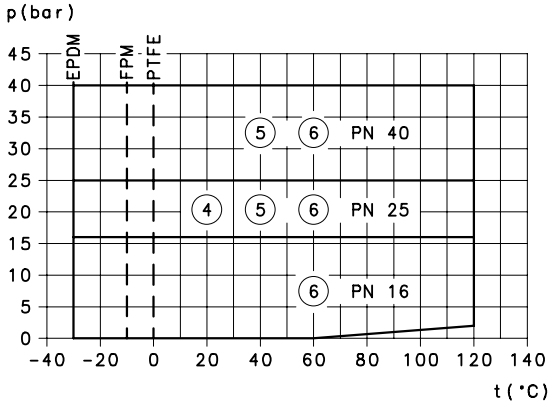

COMPATIBILITY CHART FOR MATERIALS IN CONTACT WITH MOST COMMONLY USED LIQUIDS

LIQUID	CONCENTRATION (%)	TEMPERAT. MIN/MAX (°C)	SPECIF. WEIGHT (Kg/dm^3)	1, 3, 5, 10, 15, 22 SV VERSION		33, 46, 66, 92, 125 SV VERSION		RECOMMEND. SEAL	ELASTOM.
				Standard	N	Standard	N		
Acetic acid	80	-10 +70	1,05	•	•		•	Q_1BEGG	E
Alkaline degreaser	5	80		•	•	•	•	Q_1Q_1VGG	V
Aluminium sulfate	30	-5 +50	2,71		•		•	Q_1Q_1EGG	E
Ammonia in water	25	-20 +50	0,99	•	•		•	Q_1BEGG	E
Ammonium sulfate	10	-10 +60	1,77		•		•	Q_1Q_1EGG	E
Benzoic acid	70	0 +70	1,31	•	•		•	Q_1BVGG	V
Boric acid	saturated	-10 +90	1,43	•	•		•	Q_1Q_1VGG	V
Butyl alcohol	100	-5 +80	0,81	•	•	•	•	Q_1BVGG	V
Caustic soda	25	0 +70	2,13	•	•	•	•	Q_1Q_1EGG	E
Chloroform	100	-10 +30	1,48	•	•	•	•	Q_1BVGG	V
Citric acid	5	-10 +70	1,54	•	•		•	Q_1BEGG	E
Cleaning products	10	-5 +100		•	•	•	•	Q_1Q_1VGG	V
Copper sulfate	20	0 +30	2,28		•		•	Q_1Q_1VGG	V
Cutting fluid	100	-5 +110	0,90	•	•	•	•	Q_1BVGG	V
Deionised, demineralised water	100	-25 +110	1	•	•	•	•	Q_1BEGG	E
Denatured alcohol	100	-5 +70	0,81	•	•	•	•	Q_1BEGG	E
Diathermic oil	100	-5 +110	0,90	•	•	•	•	Q_1BVGG	V
Emulsion oil and water	any	-5 +90		•	•	•	•	Q_1BVGG	V
Ethyl alcohol	100	-5 +40	0,81	•	•	•	•	Q_1BEGG	E
Ethylene glycol	30	-30 +120			•		•	Q_1BEGG	E
Formaldehyde	100	0 +30	1,13	•	•	•	•	Q_1Q_1TGG	T
Formic acid	5	-15 +25	1,22	•	•		•	Q_1BEGG	E
Glycerine	100	+20 +90	1,26	•	•	•	•	Q_1BEGG	E
Hydraulic oil	100	-5 +110		•	•	•	•	Q_1BVGG	V
Hydrochloric acid	2	-5 +25	1,20		•		•	Q_1Q_1VGG	V
Hydroxide sodium	25	0 +70		•	•	•	•	Q_1Q_1EGG	E
Iron sulfate	10	-5 +30	2,09		•		•	Q_1BEGG	E
Methyl alcohol	100	-5 +40	0,79	•	•	•	•	Q_1BEGG	E
Mineral oil	100	-5 +110	0,94	•	•	•	•	Q_1BVGG	V
Nitric acid	50	-5 +30	1,48	•	•		•	Q_1Q_1VGG	V
Perchloroethylene	100	-10 +30	1,60	•	•	•	•	Q_1BVGG	V
Phosphates-polyphosphates	10	-5 +90			•		•	Q_1Q_1VGG	V
Phosphoric acid	10	-5 +30	1,33		•		•	Q_1BEGG	E
Propyl alcohol (Propanol)	100	-5 +80	0,80	•	•	•	•	Q_1BEGG	E
Propylene glycol	30	-30 +120		•	•	•	•	Q_1BEGG	E
Sodium bicarbonate (Baking soda)	saturated				•		•	Q_1BEGG	E
Sodium hypochlorite	1	-10 +25			•		•	Q_1Q_1VGG	V
Sodium nitrate	saturated	-10 +80	2,25	•	•	•	•	Q_1BEGG	E
Sodium sulfate	15	-10 +40	2,60	•	•	•	•	Q_1Q_1EGG	E
Sulphuric acid	2	-10 +25	1,84		•		•	Q_1BVGG	V
Tannic acid	20	0 +50			•		•	Q_1BEGG	E
Tartaric acid	50	-10 +25	1,76	•	•		•	Q_1Q_1VGG	V
Trichloroethylene	100	-10 +40	1,46	•	•	•	•	Q_1BVGG	V
Uric acid	80	-10 +80	1,89	•	•		•	Q_1BEGG	E
Vegetable oil	100	-5 +110	0,95	•	•	•	•	Q_1BEGG	E
Water	100	-5 +120		•	•	•	•	Q_1BEGG	E
Water condensate	100	-5 +100	1	•	•	•	•	Q_1BEGG	E
Water detergents, mineral oils mixture	10	-5 +80		•	•	•	•	Q_1Q_1VGG	V

tab-comp-sv-en_b_tm

The above table indicates the compatibility of materials depending on the pumped liquid.
Check the specific weight of the liquid or the viscosity as this could affect the power input of the motor and hydraulic performance. For further details, please contact the sales network.

e-SV™ SERIES MOTORS

- Standard Lowara motors with powers up to 22 kW (included) for the 2-pole version. Other motor brands are used for higher powers.
- The Lowara PLM and SM three-phase motors have efficiency values that fall within the range normally referred to as **efficiency class IE2**.
- Short-circuit squirrel-cage motor (TEFC), enclosed construction with external ventilation.
- IP55 protection.
- Class F insulation.
- Performance according to EN 60034-1.
- Standard voltage.
- Cable gland with standard passage dimensions according to EN 50262 (metric thread).
- **Single-phase** version: 220-240 V 50 Hz with built-in automatic reset overload protection up to 1,5 kW.
  For higher powers the protection must be provided by the user.
- **Three-phase** version 220-240/380-415 V 50 Hz for power up to 3 kW.
  380-415/660-690 V 50 Hz for power above 3 kW.
  Overload protection to be provided by the user.
- **Type of motor used:**
  2-Pole

Single-phase:	Lowara SM	(0,37-1,5 kW)
	Lowara PLM	(2,2 kW)
Three-phase:	Lowara SM	(0,37-0,55 kW)
	Lowara SM HE	(0,75-1,1 kW)
	Lowara PLM	(1,5-22 kW)
	Other brands	(30-55 kW)

SINGLE-PHASE MOTORS AT 50 Hz, 2-POLE

MOTOR TYPE			ABSORBED CURRENT	CAPACITOR		DATA FOR 230 V 50 Hz VOLTAGE					
kW	IEC SIZE*	CONSTRUCTION DESIGN	In (A) 220-240 V	µF	V	min^{-1}	Is / In	η %	cosφ	Tn Nm	Ts/Tn**
0,37	71R	B14	2,79-2,85	14	450	2745	2,64	65,1	0,96	1,39	0,68
0,55	71	B14	3,76-3,99	16	450	2820	3,72	68,9	0,91	1,86	0,61
0,75	80R	B14	4,90-4,85	20	450	2765	3,42	70,1	0,96	2,59	0,58
1,1	80	B14	6,88-6,65	30	450	2800	3,89	74,7	0,96	3,75	0,46
1,5	90R	B14	9,21-8,58	40	450	2810	4,00	76,1	0,98	5,09	0,39
2,2	90	B14	12,5-11,6	70	450	2825	4,47	82,4	0,97	7,43	0,53

* R = Reduced size of motor casing as compared to shaft extension and flange.

1-224sv-motm-2p50-en_a_te

** Ts/Tn = ratio between starting torque and nominal torque.

THREE-PHASE MOTORS AT 50 Hz, 2-POLE

MOTOR TYPE			ABSORBED CURRENT in (A) THREE-PHASE				DATA FOR 400 V 50 Hz VOLTAGE					
kW	IEC SIZE*	CONSTRUCTION DESIGN	Δ 220-240 V	Y 380-415 V	Δ 380-415 V	Y 660-690V	min^{-1}	Is / In	η %	cosφ	Tn Nm	Ts/Tn**
0,37	71R	B14	2,34	1,35	-	-	2770	4,32	65,3	0,66	1,38	4,14
0,55	71	B14	2,56	1,48	-	-	2845	5,97	72,3	0,74	1,85	3,74
0,75	80	B14	3,05	1,76	-	-	2895	8,70	77,8	0,79	2,47	4,71
1,1	80	B14	4,09	2,36	-	-	2895	8,98	82,5	0,82	3,63	4,62
1,5	90	B14	5,23	3,02	-	-	2885	7,86	83,8	0,86	4,96	3,34
2,2	90	B14	8,04	4,64	-	-	2895	8,63	85,7	0,80	7,25	3,74
3	100R	B14	10,7	6,19	-	-	2885	8,32	85,6	0,82	9,92	3,52
4	112R	B14	-	-	7,63	4,41	2905	9,52	89,1	0,85	13,1	3,04
5,5	132R	B5	-	-	10,4	6,00	2900	10,3	87,5	0,87	18,1	4,43
7,5	132	B5	-	-	14,0	8,08	2925	9,21	88,5	0,87	24,5	3,26
11	160R	B5	-	-	20,5	11,8	2925	9,60	89,6	0,86	35,9	3,47
15	160	B5	-	-	26,0	15,0	2945	8,45	91,7	0,91	48,6	2,26
18,5	160	B5	-	-	33,2	19,2	2950	9,75	92,0	0,88	59,8	2,82
22	180R	B5	-	-	38,6	22,3	2955	9,50	92,1	0,89	71,1	2,74
30	200	B5	-	-	53,6	31,1	2955	6,50	92,9	0,87	97,0	2,40
37	200	B5	-	-	65,8	38,1	2950	6,80	93,3	0,87	120	2,40
45	225	B5	-	-	78,0	45,2	2960	7,00	93,6	0,89	145	2,20
55	250	B5	-	-	95,0	55,1	2960	7,00	93,9	0,89	178	2,20

* R = Reduced size of motor casing as compared to shaft extension and flange.

1-125sv-mott-2p50-en_a_te

** Ts/Tn = ratio between starting torque and nominal torque.

e-SV™ SERIES
MOTOR NOISE

The tables show the mean sound pressure (Lp) measured as per Curve A (Standard ISO 1680).
Noise values were measured with the 50 Hz motor running idle with a tolerance of 3 dB (A).

2-POLE MOTORS

POWER kW	MOTOR TYPE IEC SIZE*	NOISE LpA dB
0,37	71R	<70
0,55	71	<70
0,75	80R	<70
1,1	80	<70
1,5	90R	<70
2,2	90R	<70
3	100R	<70
4	112R	<70
5,5	132R	<70
7,5	132	71
11	160R	73
15	160	71
18,5	160	73
22	180R	70
30	200	72
37	200	72
45	225	75
55	250	75

*R = Reduced motor casing size with respect to shaft extension and related flange.

1-125sv_mott_2p50-en_a_tr

SVH SERIES ELECTRIC PUMPS WITH HYDROVAR® CONTROL SYSTEM

The Lowara SV electric pumps are available in the SVH version, i.e. coupled to Hydrovar®, the microprocessor based control unit designed to manage the performance of the pump based on the conditions and requirements of the system. The basic SV electric pump is thus transformed into a complete pumping system suitable for a number of applications, including:

- Variable speed pressure boosting (constant pressure is maintained in industrial, civil and agricultural applications).
- Water filtration and treatment (constant flow is maintained based on flow resistance).
- Air conditioning and heating (constant differential pressure is maintained in a closed circuit).



- **No special pumps or motors**:
  HYDROVAR© is mounted directly onto a standard three-phase TEFC motor with class F insulation up to 22 kW power. A wall-mounted version is available for higher powers, up to 45 kW.

- **No extra pressure sensors**:
  HYDROVAR© is equipped with a pressure transmitter or differential pressure transmitter, depending on the applications.

- **No separate microprocessors**:
  In multiple-pump systems the microprocessor regulates the sequential operation of the pumps or motors. Since HYDROVAR© features a built-in microprocessor, no other control devices are required.

- **No separate control panels or converters**:
  HYDROVAR© performs all the functions of a pump control panel, incorporating protections against overload, short circuit, high temperature, etc. The only external device required is a fuse on the power supply line. Will depend upon any local electrical installation regulations.

- **No by-pass lines or safety systems**:
  With HYDROVAR© the pump switches off immediately when demand is zero or exceeds the maximum capacity of the pump. This way there is no need to install additional safety devices.

- **No large diaphragm tanks are required**:
  Without a large pressure tank on the discharge side of the pump, a constant speed pump running at maximum power will be constantly switching on and off in order to satisfy system demands.

With the HYDROVAR© system the speed of each pump varies in order to maintain a constant pressure or flow. A small tank is sufficient to maintain system pressure and to ensure immediate shut off at zero demand, therefore there is no need to install a large tank. Where local regulations allow it, the HYDROVAR© systems can be connected directly to the water supply line.

The pump's operation at the correct speed based on system requirements enables energy consumption to be substantially reduced.

- **Anti-condensation heater**
  All the units are equipped with anti-condensation heaters that switch on when the pump is in standby mode to prevent condensation inside the unit.

OPERATING PRINCIPLE

The basic function of the HYDROVAR® device is to control the pump to meet the system demands.

HYDROVAR® performs these functions by:

1) Measuring the system pressure or flow via a transmitter mounted on the pump's delivery side.
2) Calculating the motor speed to maintain the correct flow or pressure.
3) Sending out a signal to the pump to start the motor, increase speed, decrease speed or stop.
4) In the case of multiple pump installations, HYDROVAR® will automatically provide for the cyclic changeover of the pump's starting sequence.

In addition to these basic functions, HYDROVAR® can do things only by the most advanced computerised control systems, such as:

- Stop the pump(s) at zero demand.
- Stop the pump(s) in case of water failure on the suction side (protection against dry running).
- Stop the pump if the required delivery exceeds the pump's capacity (protection against cavitation caused by excessive demand), or automatically switch on the next pump in a multiple series.
- Protect the pump and motor from overvoltage, undervoltage, overload and earth fault.
- Vary the pump speed acceleration and deceleration time.
- Compensate for increased flow resistance at high flow rates.
- Conduct automatic test starts at set intervals.
- Monitor the converter and motor operating hours.
- Display all functions on an LCD in different languages (Italian, English, French, German, Spanish, Portuguese, Dutch).
- Send a signal to a remote control system which is proportional to the pressure and frequency.
- Communicate with another HYDROVAR® or control system via an RS 485 interface.

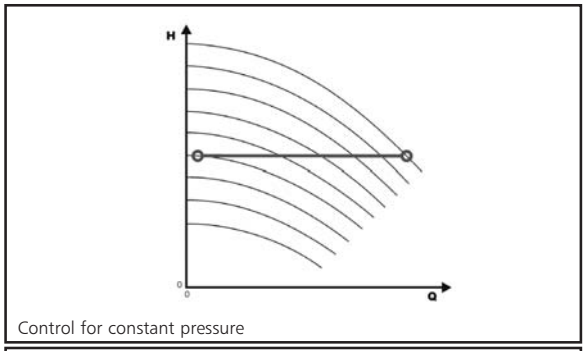

Control for constant pressure

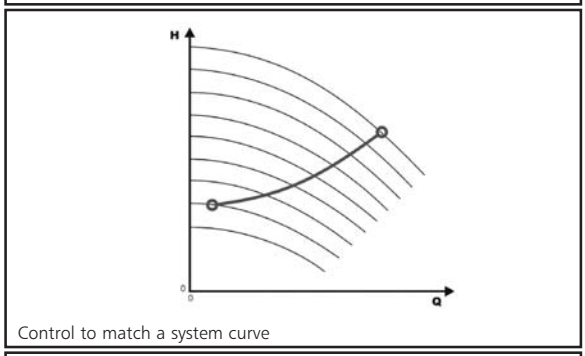

Control to match a system curve

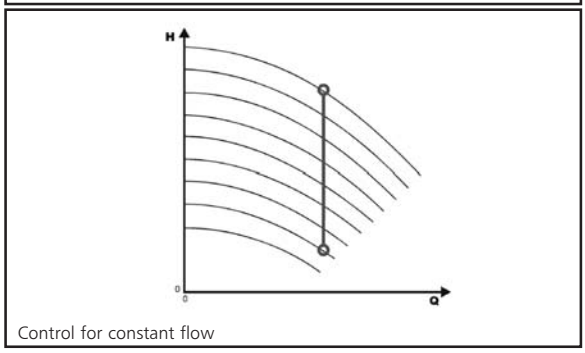

Control for constant flow

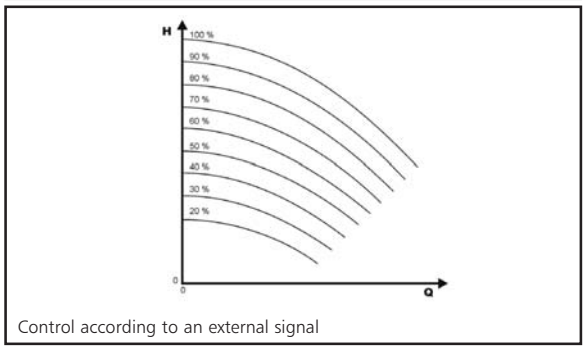

Control according to an external signal

TYPICAL EXAMPLE OF ENERGY SAVINGS

System: 22SV07F75T vertical multistage electric pump with 7,5 kW motor equipped with HYDROVAR®, 70 m head. 19 hour/day operation.
Application: maintaining a constant pressure as the flow rate varies.

FLOW	ABSORBED POWER		POWER SAVED	OPERATING TIME	TOTAL ENERGY SAVINGS
	CONSTANT SPEED PUMP	VARIABLE SPEED PUMP			
m^3/h	kW	kW	kW	(hours)	kWh
24	7,4	7,4	0,0	876	-
21	6,9	6,1	0,8	876	701
18	6,5	5,0	1,5	1752	2.628
14	5,6	3,8	1,8	1752	3.154
10	5,1	2,8	2,3	1752	4.030
YEARLY ENERGY SAVINGS (kWh)					10.512

sv-hydr-en_a_te

TYPICAL APPLICATIONS OF e-SV™ SERIES ELECTRIC PUMPS

WATER SUPPLY AND PRESSURE BOOSTING

- Pressure boosting in building, hotel, residential complexes.
- Pressure booster stations, supply of water networks.
- Booster packages.

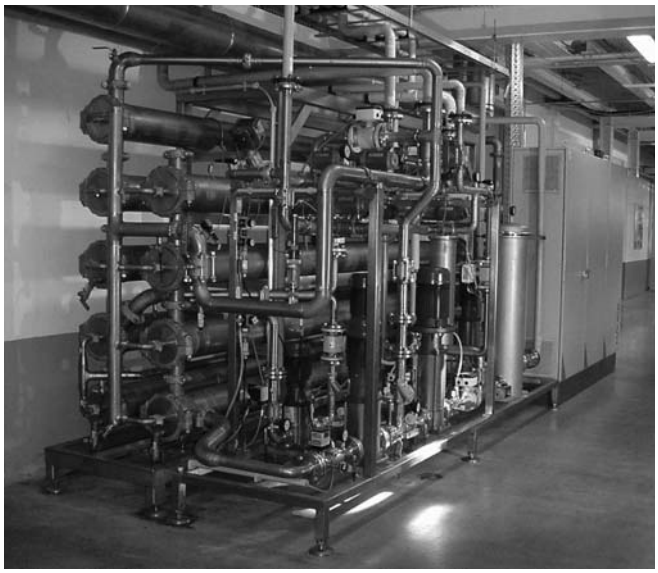

WATER TREATMENT

- Ultrafiltration systems.
- Reverse osmosis systems.
- Water softeners and de-mineralization.
- Distillation systems.
- Filtration.

LIGHT INDUSTRY

- Washing and cleaning plants (washing and degreasing of mechanical parts, car and truck wash tunnels, washing of electronic industry circuits).
- Commercial washers.
- Firefighting system pumps.

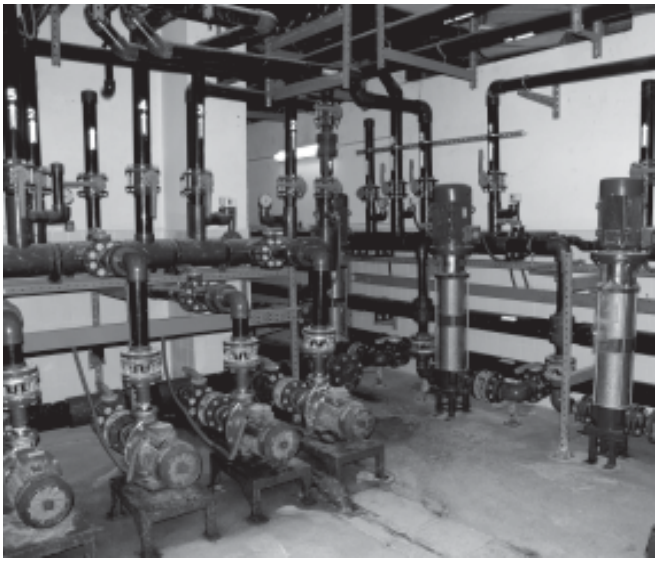

PHARMACEUTICAL AND FOOD & BEVERAGE INDUSTRIES

- Production plant where specific sanitary standards are required.

IRRIGATION AND AGRICULTURE

- Greenhouses.
- Humidifiers.
- Sprinkler irrigation.

HEATING, VENTILATION AND AIR CONDITIONING (HVAC)

- Cooling towers and systems.
- Temperature control systems.
- Refrigerators.
- Induction heating.
- Heat exchangers.
- Boilers, water recirculation and heating.



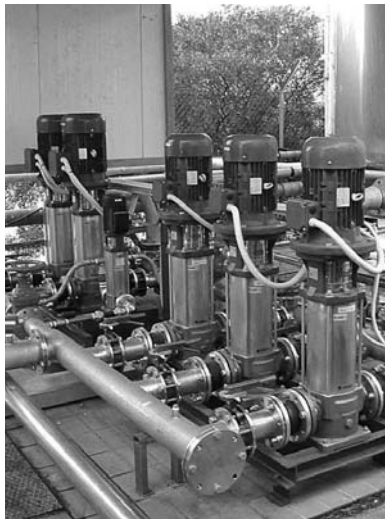



e-SV™ SERIES
HYDRAULIC PERFORMANCE RANGE AT 50 Hz, 2 POLES

e-SV™	~ 2900 [rpm]	ISO 9906 - Annex A

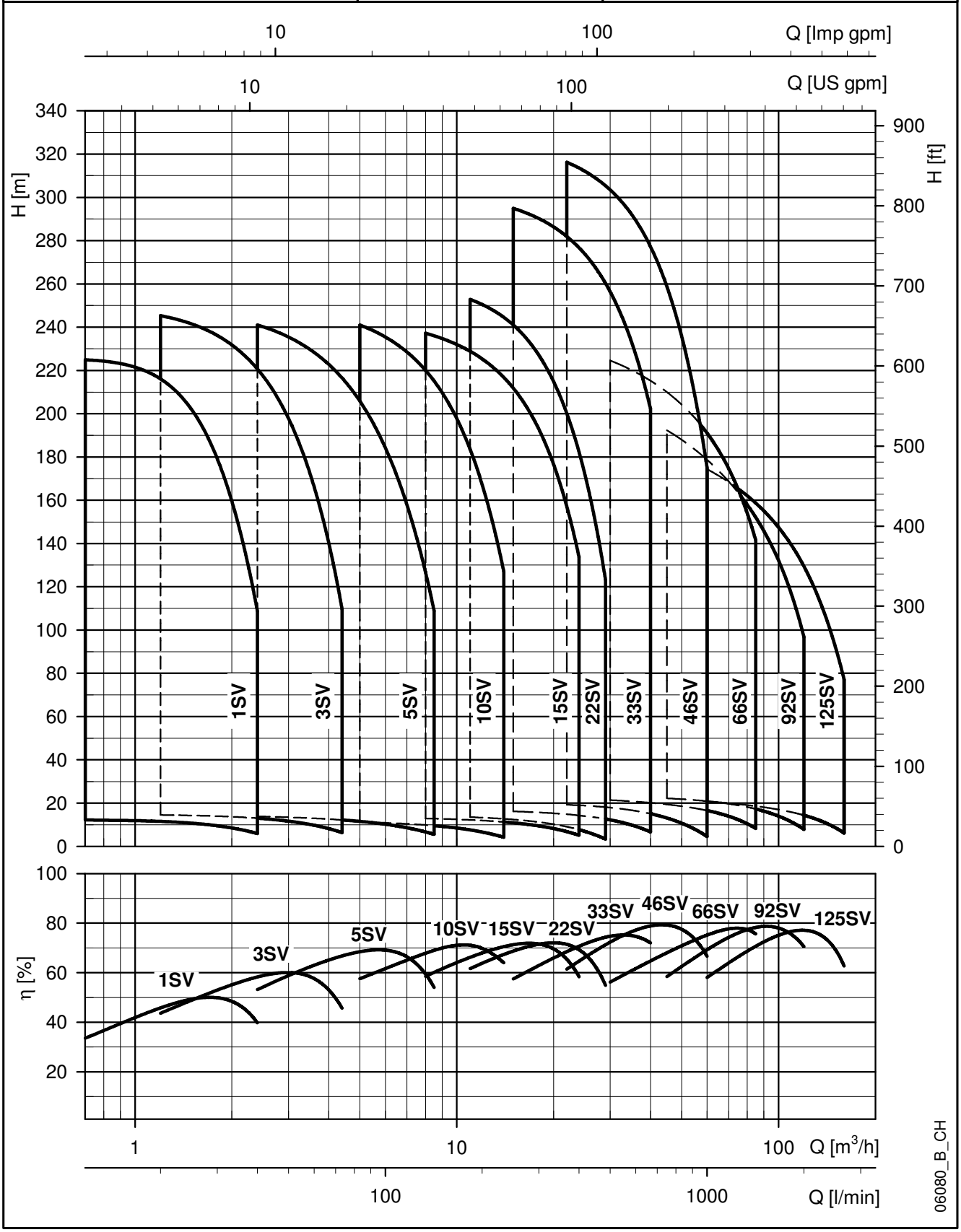

1, 3, 5SV SERIES
HYDRAULIC PERFORMANCE TABLE AT 50 Hz, 2 POLES

PUMP TYPE	RATED POWER		Q = DELIVERY													
			l/min 0	12	20	25	30	35	40	45	50	60	73	100	120	141
			m^3/h 0	0,7	1,2	1,5	1,8	2,1	2,4	2,7	3,0	3,6	4,4	6,0	7,2	8,5
	kW	HP	H = TOTAL HEAD IN METRES OF COLUMN OF WATER													
1SV02	0,37	0,5	12,2	12,2	11,5	10,7	9,5	7,9	6,0							
1SV03	0,37	0,5	18,0	18,0	17,0	15,7	13,8	11,4	8,4							
1SV04	0,37	0,5	23,7	23,5	22,1	20,4	17,9	14,6	10,6							
1SV05	0,37	0,5	29,3	28,9	27,0	24,8	21,6	17,4	12,5							
1SV06	0,37	0,5	34,8	34,2	31,7	28,9	25,0	20,0	14,0							
1SV07	0,37	0,5	40,2	39,2	36,1	32,7	28,1	22,2	15,2							
1SV08	0,55	0,75	48,1	47,9	45,2	41,8	36,8	30,4	22,4							
1SV09	0,55	0,75	53,7	53,4	50,4	46,4	40,8	33,5	24,6							
1SV10	0,55	0,75	59,4	59,0	55,5	51,0	44,7	36,6	26,6							
1SV11	0,55	0,75	65,1	64,5	60,4	55,5	48,5	39,5	28,5							
1SV12	0,75	1	73,3	73,1	69,3	64,3	57,1	47,6	35,7							
1SV13	0,75	1	79,2	78,9	74,8	69,4	61,6	51,2	38,2							
1SV15	0,75	1	90,9	90,5	85,6	79,3	70,1	58,1	43,1							
1SV17	1,1	1,5	105,2	104,9	100,0	93,1	82,6	68,6	51,2							
1SV19	1,1	1,5	117,0	116,7	111,0	103,2	91,5	75,8	56,3							
1SV22	1,1	1,5	134,6	134,1	127,4	118,1	104,4	86,1	63,5							
1SV25	1,5	2	152,6	152,4	145,5	135,4	120,0	99,1	72,7							
1SV27	1,5	2	164,3	164,0	156,4	145,4	128,8	106,1	77,5							
1SV30	1,5	2	181,7	181,3	172,6	160,1	141,2	115,7	83,9							
1SV32	2,2	3	197,2	197,1	188,4	175,8	156,5	130,0	96,3							
1SV34	2,2	3	209,2	208,9	199,8	186,3	165,5	137,1	101,2							
1SV37	2,2	3	225,9	224,9	216,1	201,9	179,3	148,1	108,7							
3SV02	0,37	0,5	14,9		14,5	14,3	14,0	13,5	13,0	12,4	11,7	9,8	6,5			
3SV03	0,37	0,5	22,0		21,2	20,8	20,3	19,6	18,7	17,7	16,6	13,7	8,6			
3SV04	0,37	0,5	28,9		27,7	27,1	26,2	25,2	23,9	22,5	20,8	16,8	10,1			
3SV05	0,55	0,75	37,2		36,4	35,8	35,0	33,9	32,6	31,1	29,2	24,5	16,2			
3SV06	0,55	0,75	44,4		43,4	42,6	41,6	40,2	38,6	36,6	34,3	28,5	18,5			
3SV07	0,75	1	52,5		51,8	51,0	50,0	48,7	47,0	45,0	42,5	36,1	24,6			
3SV08	0,75	1	60,0		59,1	58,2	57,0	55,4	53,4	51,0	48,1	40,7	27,5			
3SV09	1,1	1,5	67,7		66,8	65,8	64,5	62,8	60,6	57,9	54,6	46,4	31,6			
3SV10	1,1	1,5	75,0		73,8	72,7	71,3	69,3	66,9	63,8	60,2	51,0	34,5			
3SV11	1,1	1,5	82,3		81,0	79,7	78,0	75,8	73,1	69,7	65,7	55,5	37,4			
3SV12	1,1	1,5	89,6		87,8	86,4	84,5	82,1	79,1	75,5	71,1	59,9	40,1			
3SV13	1,5	2	98,1		96,7	95,4	93,5	91,0	87,8	83,9	79,2	67,2	45,6			
3SV14	1,5	2	105,6		104,1	102,5	100,4	97,7	94,2	89,9	84,8	71,8	48,5			
3SV16	1,5	2	119,9		117,8	116,1	113,6	110,5	106,5	101,6	95,8	80,9	54,2			
3SV19	2,2	3	144,3		142,3	140,3	137,5	133,9	129,2	123,5	116,7	99,1	67,6			
3SV21	2,2	3	159,3		156,9	154,6	151,4	147,3	142,1	135,7	128,0	108,5	73,6			
3SV23	2,2	3	174,0		171,1	168,5	165,0	160,4	154,7	147,6	139,2	117,7	79,4			
3SV25	2,2	3	188,5		186,1	183,3	179,3	174,1	167,6	159,7	150,3	126,6	84,8			
3SV27	3	4	204,4		201,7	198,8	194,7	189,4	182,7	174,4	164,5	139,4	94,4			
3SV29	3	4	219,3		216,0	212,8	208,3	202,6	195,3	186,4	175,7	148,6	100,2			
3SV31	3	4	233,8		230,3	226,8	222,0	215,7	207,8	198,2	186,7	157,6	106,0			
3SV33	3	4	248,5		245,3	241,5	236,2	229,3	220,7	210,2	197,7	166,3	111,2			
5SV02	0,37	0,5	14,8						13,8	13,7	13,4	13,0	12,2	10,2	8,2	5,7
5SV03	0,55	0,75	21,8						19,9	19,6	19,2	18,4	17,1	13,9	10,8	6,9
5SV04	0,55	0,75	30,0						28,2	27,9	27,5	26,6	25,2	21,2	17,3	12,2
5SV05	0,75	1	38,0						36,4	36,0	35,5	34,5	32,9	28,2	23,5	17,1
5SV06	1,1	1,5	45,3						43,7	43,3	42,8	41,6	39,6	33,9	28,1	20,3
5SV07	1,1	1,5	52,7						50,7	50,1	49,5	48,1	45,8	39,1	32,2	23,1
5SV08	1,1	1,5	60,1						57,6	57,0	56,2	54,6	51,8	44,1	36,2	25,8
5SV09	1,5	2	68,0						65,5	64,8	64,0	62,2	59,3	50,6	41,9	30,2
5SV10	1,5	2	75,5						72,4	71,7	70,8	68,7	65,4	55,7	46,0	33,0
5SV11	1,5	2	82,8						79,3	78,4	77,5	75,2	71,4	60,7	49,9	35,6
5SV12	2,2	3	90,8						88,0	87,0	86,0	83,4	79,3	67,4	55,7	40,5
5SV13	2,2	3	98,3						95,0	94,0	92,8	90,0	85,5	72,6	59,9	43,5
5SV14	2,2	3	105,7						102,0	100,9	99,6	96,6	91,7	77,8	64,0	46,3
5SV15	2,2	3	113,1						109,0	107,8	106,4	103,1	97,8	82,8	68,1	49,1
5SV16	2,2	3	120,5						115,9	114,6	113,1	109,6	103,9	87,8	72,1	51,8
5SV18	3	4	135,8						131,1	129,7	128,0	124,1	117,8	99,9	82,3	59,5
5SV21	3	4	157,9						152,0	150,3	148,3	143,6	136,1	114,9	94,2	67,6
5SV23	4	5,5	174,4						168,9	167,2	165,1	160,2	152,3	129,6	107,2	78,2
5SV25	4	5,5	189,2						183,1	181,1	178,9	173,5	164,8	140,1	115,7	84,1
5SV28	4	5,5	211,5						204,2	201,9	199,4	193,3	183,4	155,5	128,0	92,7
5SV30	5,5	7,5	227,0						219,8	217,5	214,8	208,4	198,1	168,5	139,3	101,5
5SV33	5,5	7,5	249,2						241,0	238,4	235,5	228,4	216,9	184,2	151,9	110,3

Performances in compliance with ISO 9906 - Annex A.

10, 15, 22SV SERIES
HYDRAULIC PERFORMANCE TABLE AT 50 Hz, 2 POLES

PUMP TYPE	RATED POWER		Q = DELIVERY													
			l/min 0	83,34	100	133	170	183,34	233	270	330	350	400	430	460	483,33
			m^3/h 0	5,0	6,0	8,0	10,2	11,0	14,0	16,2	19,8	21,0	24,0	25,8	27,6	29,0
	kW	HP	H = TOTAL HEAD IN METRES OF COLUMN OF WATER													
10SV01	0,75	1	11,8	11,2	10,9	9,9	8,3	7,6	4,3							
10SV02	0,75	1	23,6	21,9	21,3	19,6	17,0	15,8	10,0							
10SV03	1,1	1,5	35,7	33,0	32,1	29,6	25,8	24,1	16,0							
10SV04	1,5	2	47,7	44,2	43,0	39,9	34,8	32,6	21,7							
10SV05	2,2	3	60,0	56,1	54,7	50,9	44,9	42,2	29,0							
10SV06	2,2	3	71,8	66,8	65,0	60,4	53,1	49,8	33,9							
10SV07	3	4	83,6	78,3	76,2	70,8	62,1	58,3	39,8							
10SV08	3	4	95,3	88,9	86,5	80,1	70,2	65,7	44,5							
10SV09	4	5,5	106,3	100,1	97,5	90,8	80,0	75,1	52,1							
10SV10	4	5,5	118,0	110,8	107,9	100,3	88,2	82,8	57,2							
10SV11	4	5,5	129,6	121,3	118,1	109,6	96,3	90,3	62,1							
10SV13	5,5	7,5	156,0	146,5	142,7	132,6	116,4	109,2	74,3							
10SV15	5,5	7,5	179,5	167,9	163,4	151,6	132,8	124,3	83,9							
10SV17	7,5	10	205,0	193,2	188,5	175,7	154,7	145,2	98,8							
10SV18	7,5	10	216,9	204,2	199,1	185,5	163,2	153,1	104,0							
10SV20	7,5	10	240,6	226,0	220,3	205,0	180,2	168,9	114,3							
10SV21	11	15	253,6	241,0	235,5	220,2	195,0	183,5	127,5							
15SV01	1,1	1,5	14,0			12,9	12,4	12,2	11,3	10,4	8,4	7,6	5,1			
15SV02	2,2	3	28,7			26,7	25,9	25,5	23,9	22,4	18,9	17,4	13,1			
15SV03	3	4	43,3			40,4	39,1	38,6	36,2	33,8	28,7	26,5	20,1			
15SV04	4	5,5	58,4			54,7	53,1	52,5	49,4	46,3	39,7	36,9	28,7			
15SV05	4	5,5	72,7			67,8	65,8	65,0	61,0	57,1	48,7	45,2	34,9			
15SV06	5,5	7,5	87,6			81,5	79,4	78,4	74,1	69,9	60,3	56,3	44,2			
15SV07	5,5	7,5	101,9			94,5	91,9	90,8	85,7	80,6	69,4	64,7	50,5			
15SV08	7,5	10	117,4			110,9	108,0	106,8	100,8	94,9	82,0	76,7	60,6			
15SV09	7,5	10	131,9			124,4	121,0	119,6	112,8	106,1	91,5	85,5	67,4			
15SV10	11	15	147,7			138,8	135,3	133,8	126,7	119,6	103,9	97,4	77,5			
15SV11	11	15	162,3			152,4	148,5	146,8	138,9	131,1	113,8	106,5	84,7			
15SV13	11	15	191,3			179,2	174,5	172,5	163,1	153,7	133,1	124,5	98,6			
15SV15	15	20	222,1			209,9	204,8	202,6	192,2	181,7	158,3	148,5	118,8			
15SV17	15	20	251,6			237,3	231,4	228,9	216,9	205,0	178,4	167,3	133,6			
22SV01	1,1	1,5	14,7					13,5	12,7	12,0	10,4	9,7	7,7	6,3	4,7	3,4
22SV02	2,2	3	30,4					28,4	27,2	26,0	23,3	22,2	18,9	16,6	13,8	11,5
22SV03	3	4	45,4					42,2	40,4	38,5	34,5	32,8	27,8	24,2	20,2	16,6
22SV04	4	5,5	60,9					56,8	54,4	51,9	46,6	44,4	37,9	33,1	27,7	23,0
22SV05	5,5	7,5	76,0					70,9	67,9	64,9	58,3	55,6	47,4	41,4	34,7	28,8
22SV06	7,5	10	93,2					88,8	85,7	82,5	75,4	72,4	63,3	56,7	49,1	42,6
22SV07	7,5	10	108,5					103,1	99,4	95,7	87,2	83,7	73,1	65,3	56,5	48,8
22SV08	11	15	124,6					119,2	115,2	111,0	101,6	97,7	85,7	77,0	66,9	58,2
22SV09	11	15	140,1					133,7	129,2	124,4	113,8	109,3	95,8	86,0	74,6	64,8
22SV10	11	15	155,4					148,2	143,1	137,8	125,9	120,9	105,8	94,8	82,3	71,3
22SV12	15	20	186,1					178,6	172,9	166,8	152,9	147,0	129,1	115,9	100,7	87,4
22SV14	15	20	216,6					207,7	200,9	193,7	177,4	170,4	149,4	133,9	116,1	100,6
22SV17	18,5	25	263,5					252,8	244,7	236,0	216,2	207,8	182,3	163,6	142,0	123,2

Performances in compliance with ISO 9906 - Annex A.

10-22sv-2p50-en_b_th

33, 46SV SERIES
HYDRAULIC PERFORMANCE TABLE AT 50 Hz, 2 POLES

PUMP TYPE	RATED POWER		Q = DELIVERY										
			l/min 0	250	300	367	417	500	583	667	750	900	1000
			m^3/h 0	15	18	22	25	30	35	40	45	54	60
	kW	HP	H = TOTAL HEAD METRES COLUMN OF WATER										
33SV1/1A	2,2	3	17,4	16,2	15,7	15	14	12,2	9,8	6,7			
33SV1	3	4	23,8	21,7	21,2	20	20	17,8	15,5	12,7			
33SV2/2A	4	5,5	35,1	34,1	33,3	32	30	27	22,4	16,6			
33SV2/1A	4	5,5	40,8	38,8	37,9	36	35	32	27,5	22,3			
33SV2	5,5	7,5	47,8	45	44,1	43	41	39	35	29,9			
33SV3/2A	5,5	7,5	57,7	55,2	53,8	51	49	44	38	29,6			
33SV3/1A	7,5	10	64,5	61,3	60	58	56	51	45	37			
33SV3	7,5	10	71,5	67,4	66,0	64	62	58	52,0	44,6			
33SV4/2A	7,5	10	82	78,8	77	74	72	66	58	47,2			
33SV4/1A	11	15	88,9	85	83	81	78	73	65	55,1			
33SV4	11	15	95,9	91,1	90	87	85	80	73	63,1			
33SV5/2A	11	15	106	101,6	100	96	93	85	76	63			
33SV5/1A	11	15	112,7	107,2	105	102	99	92	82	70			
33SV5	15	20	120,4	114,9	113	110	107	101	92	80,5			
33SV6/2A	15	20	131,2	126,9	125	120	116	108	96	81,2			
33SV6/1A	15	20	139,1	133,5	131	128	124	116	105	90,4			
33SV6	15	20	145,6	139	137	133	129	121	110	96,1			
33SV7/2A	15	20	156	149,9	147	143	138	128	115	98,2			
33SV7/1A	18,5	25	163,3	156,6	154	150	145	136	123	106,2			
33SV7	18,5	25	170,3	162,8	160	156	152	142	130	113,3			
33SV8/2A	18,5	25	180,6	173,7	171	166	161	150	135	115,3			
33SV8/1A	18,5	25	187,4	179,5	177	171	166	156	141	121,7			
33SV8	22	30	194,1	185,1	182	177	172	161	147	128			
33SV9/2A	22	30	202,1	194,1	191	185	179	166	150	127,9			
33SV9/1A	22	30	210,2	201,2	198	192	186	174	157	135,9			
33SV9	22	30	216,8	206,8	204	198	193	181	165	143,7			
33SV10/2A	22	30	226,4	217,2	213	207	200	186	168	143,9			
33SV10/1A	30	40	234,5	225	221	215	209	196	178	154,2			
33SV10	30	40	241,8	231,3	228	222	216	203	185	162,2			
33SV11/2A	30	40	252	244	240	233	226	211	190	163,7			
33SV11/1A	30	40	259	249,2	245	238	232	217	197	171			
33SV11	30	40	265,7	253,6	250	243	236	222	203	176,9			
33SV12/2A	30	40	275,9	266,2	262	254	246	229	207	178,3			
33SV12/1A	30	40	282,8	271,5	267	260	252	236	214	185,6			
33SV12	30	40	289,8	276,7	272	265	258	242	221	192,9			
33SV13/2A	30	40	300,5	291,1	286	278	270	252	228	197,6			
33SV13/1A	30	40	306,9	294,9	290	282	274	256	233	202,4			
46SV1/1A	3	4	19,5			19,2	18,8	17,9	16,7	15,1	13,1	8,5	4,6
46SV1	4	5,5	27,2			24	23,5	22,5	21,4	19,9	18,2	14,3	10,8
46SV2/2A	5,5	7,5	38,8			39,8	39,2	37,8	35,7	32,9	29,4	21,1	13,9
46SV2	7,5	10	52,6			48,5	47,7	46,1	44,2	41,7	38,7	31,4	25,1
46SV3/2A	11	15	64,7			65,1	64	62	60	56	52	40,4	30,8
46SV3	11	15	80,8			74,3	73	71	68	65	60	50	40,7
46SV4/2A	15	20	92,4			90,7	90	87	83	79	73	58	45,6
46SV4	15	20	107,3			99,8	98	96	92	87	82	68	55,9
46SV5/2A	18,5	25	117,2			114,8	113	110	106	100	93	75	60,2
46SV5	18,5	25	134,5			125,1	123	120	116	110	103	86	71,5
46SV6/2A	22	30	143,7			139,3	138	134	129	122	113	92	73,4
46SV6	22	30	161			149,9	148	144	139	132	124	104	86
46SV7/2A	30	40	171,3			164,9	163	158	152	144	134	110	88,6
46SV7	30	40	188,6			175,5	173	168	162	155	145	122	101,2
46SV8/2A	30	40	198,2			190	188	182	176	166	155	127	103,1
46SV8	30	40	213,1			198,6	196	191	184	175	164	137	112,6
46SV9/2A	30	40	224,8			214,5	212	206	198	187	174	143	116
46SV9	37	50	240,9			225,2	222	217	209	199	187	157	130,2
46SV10/2A	37	50	252,7			241,1	238	232	223	212	198	164	133,9
46SV10	37	50	267,6			250,3	247	241	232	221	208	174	144,8
46SV11/2A	45	60	280,4			267,4	264	258	249	237	222	184	151,1
46SV11	45	60	295,5			276,4	273	266	257	245	230	194	161,3
46SV12/2A	45	60	307,3			292,5	289	282	272	259	243	202	165,8
46SV12	45	60	321,8			301	297	290	280	267	250	210	175
46SV13/2A	45	60	332,5			316,2	312	304	292	277	259	214	175

Performances in compliance with ISO 9906 - Annex A.

66, 92, 125SV SERIES
HYDRAULIC PERFORMANCE TABLE AT 50 Hz, 2 POLES

PUMP TYPE	RATED POWER		Q = DELIVERY												
			l/min 0	500	600	700	750	900	1000	1200	1300	1417	1600	1800	2000
			m^3/h 0	30	36	42	45	54	60	72	78	85	96	108	120
	kW	HP	H = TOTAL HEAD METRES COLUMN OF WATER												
66SV1/1A	4	5,5	23,8	21,4	20,7	19,9	19,4	17,8	16,6	13,3	11,2	8,3			
66SV1	5,5	7,5	29,2	25,8	24,8	23,8	23,3	21,8	20,7	17,9	16,1	13,5			
66SV2/2A	7,5	10	47,5	42,6	41,2	39,5	38,6	36	32,9	26,4	22,2	16,4			
66SV2/1A	11	15	54,2	49,6	48,2	46,7	45,8	42,9	40,6	34,8	31,2	26,2			
66SV2	11	15	60,4	55,7	54,4	52,8	52	49,3	47,1	42	38,9	34,7			
66SV3/2A	15	20	78,4	71,6	70	67	66	62	58	49	43,3	35,3			
66SV3/1A	15	20	84,7	77,8	76	74	72	68	65	56	51	44,0			
66SV3	18,5	25	91,4	84,7	83	81	79	75	72	64	60	53,5			
66SV4/2A	18,5	25	108,9	99,6	97	94	92	86	82	70	63	52,8			
66SV4/1A	22	30	115,2	105,9	103	100	99	93	89	78	71	61,8			
66SV4	22	30	121,6	112,5	110	107	105	100	96	86	79	70,8			
66SV5/2A	30	40	139,1	127,5	124	120	118	111	106	92	83	70,4			
66SV5/1A	30	40	145,6	134	131	127	125	118	112	99	91	79,5			
66SV5	30	40	152	140,4	137	133	131	125	119	107	99	88,5			
66SV6/2A	30	40	169,5	155,6	152	147	144	136	129	113	103	88,1			
66SV6/1A	30	40	176	162	158	153	151	143	136	121	111	97,2			
66SV6	37	50	182,4	168,5	164	160	158	150	143	128	119	106,2			
66SV7/2A	37	50	199,9	183,7	179	174	171	161	153	134	122	105,8			
66SV7/1A	37	50	206,4	190,1	185	180	177	168	160	142	131	114,9			
66SV7	45	60	212,8	196,5	192	187	184	174	167	150	139	123,9			
66SV8/2A	45	60	230,3	211,8	206	200	197	186	177	156	142	123,5			
66SV8/1A	45	60	236,8	218,2	213	207	204	193	184	163	150	132,6			
66SV8	45	60	243,2	224,6	219	213	210	199	191	171	159	141,6			
92SV1/1A	5,5	7,5	24,5				22,2	21,5	20,9	19,4	18,5	17,3	15	11,8	7,9
92SV1	7,5	10	33,5				28,7	27,2	26,2	24,3	23,3	22,2	20,2	17,6	14,3
92SV2/2A	11	15	49,4				45,1	43,7	42,5	39,6	37,9	35,5	30,9	24,6	16,8
92SV2	15	20	67,8				58,2	55	53	49,5	47,6	45,2	41,4	36,3	29,6
92SV3/2A	18,5	25	82,4				74,4	72	70	65	62	59	52	43,6	32,9
92SV3	22	30	102,2				88,2	84	81	76	73	69	63	56	46,3
92SV4/2A	30	40	115,7				104	100	97	90	87	82	74	63	49
92SV4	30	40	133,1				117	112	108	101	97	92	85	75	62,5
92SV5/2A	37	50	149				133,2	128	124	116	111	105	95	81	64,6
92SV5	37	50	166,4				146,3	140	135	126	121	115	106	94	78,1
92SV6/2A	45	60	183,3				163,1	156	152	141	135	129	117	101	81
92SV6	45	60	200,9				175,9	168	163	151	146	139	127	113	94,2
92SV7/2A	45	60	216,8				192,4	184	179	167	160	152	138	120	96,7

Performances in compliance with ISO 9906 - Annex A.

66-92sv-2p50-en_a_th

PUMP TYPE	RATED POWER		Q = DELIVERY												
			l/min 0	500	600	750	900	1000	1200	1416	1700	1900	2000	2150	2300	2666
			m^3/h 0	30,0	36,0	45,0	54,0	60,0	72,0	85,0	102,0	114,0	120,0	129,0	138,0	160,0
	kW	HP	H = TOTAL HEAD IN METRES OF COLUMN OF WATER												
125SV1	7,5	10	27,6					20,8	19,8	18,6	16,8	15,3	14,4	12,9	11,3	6,2
125SV2	15	20	53,8					44,4	42,5	40,4	37,1	34,4	32,9	30,4	27,7	19,6
125SV3	22	30	80,7					66,5	63,8	60,6	55,7	51,6	49,4	45,7	41,5	29,4
125SV4	30	40	107,6					88,7	85,0	80,7	74,2	68,8	65,8	60,9	55,4	39,2
125SV5	37	50	134,5					110,9	106,3	100,9	92,8	86,0	82,3	76,1	69,2	49,0
125SV6	45	60	161,4					133,1	127,6	121,1	111,3	103,2	98,7	91,3	83,1	58,8
125SV7	55	75	188,3					155,2	148,8	141,3	129,9	120,4	115,2	106,6	96,9	68,6
125SV8/2A	55	75	211,5					174,4	167,2	158,7	145,9	135,3	129,4	119,7	108,9	77,1

Performances in compliance with ISO 9906 - Annex A.

125sv-2p50_a_th

1SV SERIES, 2 TO 15 STAGES
DIMENSIONS AND WEIGHTS AT 50 Hz, 2 POLES

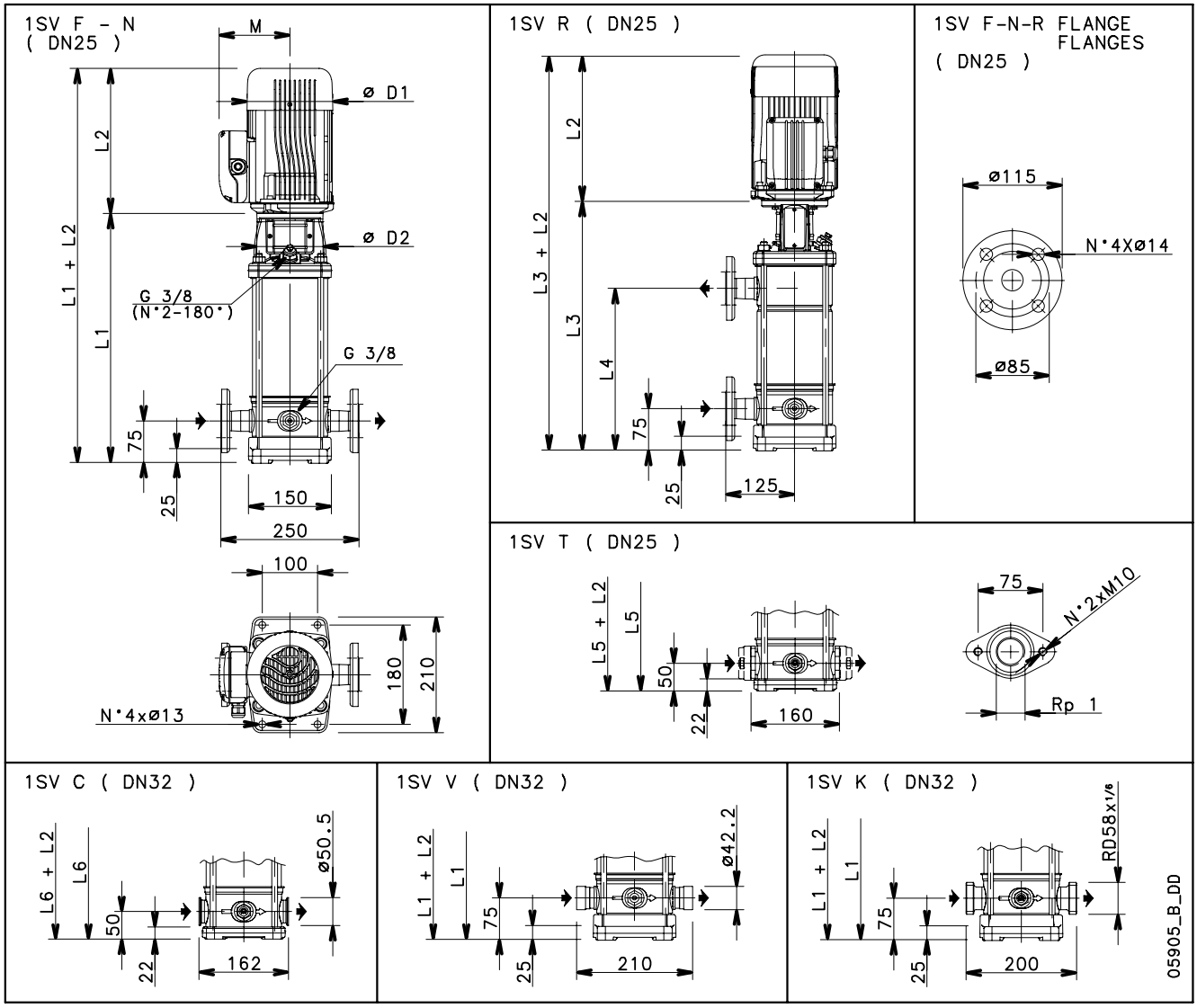

PUMP TYPE	MOTOR		DIMENSIONS (mm)													WEIGHT kg	
				L2						M		D1					ELECTRIC
	kW	SIZE	L1	1 ~	3 ~	L3	L4	L5	L6	1 ~	3 ~	1 ~	3 ~	D2	PUMP	PUMP
1SV02	0,37	71	278	209	209	-	-	253	253	111	111	120	120	105	8,3	13
1SV03	0,37	71	278	209	209	-	-	253	253	111	111	120	120	105	8,6	13,4
1SV04	0,37	71	298	209	209	-	-	273	273	111	111	120	120	105	9	13,8
1SV05	0,37	71	318	209	209	-	-	293	293	111	111	120	120	105	9,4	14,2
1SV06	0,37	71	338	209	209	-	-	313	313	111	111	120	120	105	9,8	14,6
1SV07	0,37	71	358	209	209	358	207	333	333	111	111	120	120	105	10,2	14,9
1SV08	0,55	71	378	231	231	378	227	353	353	121	121	140	140	105	10,5	15,2
1SV09	0,55	71	398	231	231	398	247	373	373	121	121	140	140	105	10,9	15,6
1SV10	0,55	71	418	231	231	418	267	393	393	121	121	140	140	105	11,3	16
1SV11	0,55	71	438	231	231	438	287	413	413	121	121	140	140	105	11,7	16,4
1SV12	0,75	80	468	226	263	468	307	443	443	121	129	140	155	120	12,7	23,7
1SV13	0,75	80	488	226	263	488	327	463	463	121	129	140	155	120	13,1	24,1
1SV15	0,75	80	528	226	263	528	367	503	503	121	129	140	155	120	13,9	25

1sv-1-2p50-en_a_td

1SV SERIES, 2 TO 15 STAGES
OPERATING CHARACTERISTICS AT 50 Hz, 2 POLES

1SV	~ 2900 [rpm]	ISO 9906 - Annex A

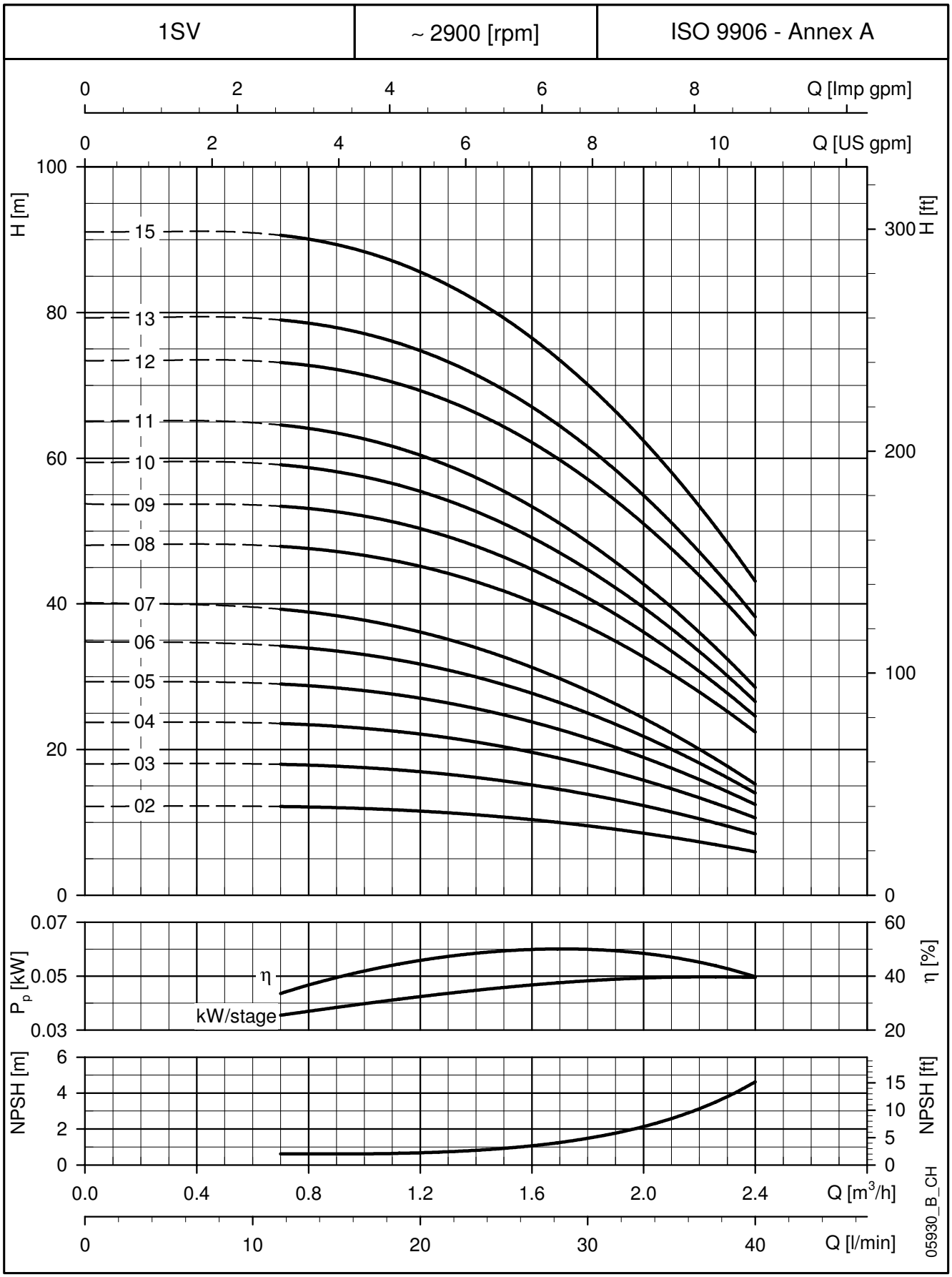

These performances are valid for liquids with density ρ = 1.0 Kg/dm³ and kinematic viscosity ν = 1 mm²/sec.

1SV SERIES, 17 TO 37 STAGES
DIMENSIONS AND WEIGHTS AT 50 Hz, 2 POLES

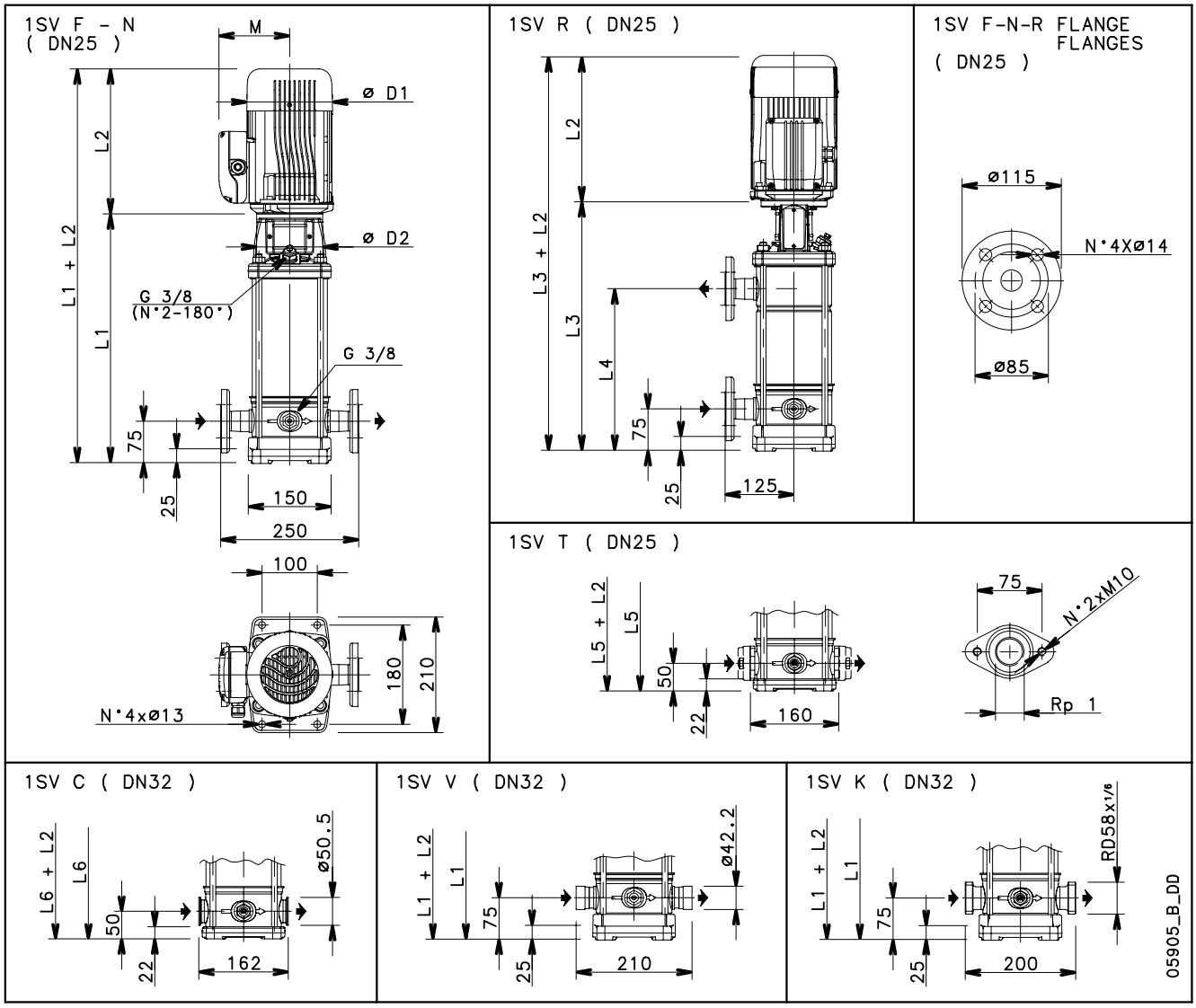

PUMP TYPE	MOTOR		DIMENSIONS (mm)													WEIGHT kg	
				L2						M		D1					ELECTRIC
	kW	SIZE	L1	1 ~	3 ~	L3	L4	L5	L6	1 ~	3 ~	1 ~	3 ~	D2	PUMP	PUMP
1SV17	1,1	80	568	263	263	568	407	543	543	137	129	155	155	120	14,7	28
1SV19	1,1	80	608	263	263	608	447	583	583	137	129	155	155	120	15,5	28,8
1SV22	1,1	80	668	263	263	668	507	643	643	137	129	155	155	120	16,7	30
1SV25	1,5	90	738	263	298	738	567	713	713	137	134	155	174	140	18,7	35,3
1SV27	1,5	90	778	263	298	778	607	-	753	137	134	155	174	140	19,5	36,1
1SV30	1,5	90	838	263	298	838	667	-	813	137	134	155	174	140	20,7	37
1SV32	2,2	90	878	298	298	878	707	-	853	151	134	174	174	140	21,5	37,8
1SV34	2,2	90	918	298	298	918	747	-	893	151	134	174	174	140	22,3	38,6
1SV37	2,2	90	978	298	298	978	807	-	953	151	134	174	174	140	23,5	39,8

1sv-2-2p50-en_a_td

1SV SERIES, 17 TO 37 STAGES
OPERATING CHARACTERISTICS AT 50 Hz, 2 POLES

1SV	~ 2900 [rpm]	ISO 9906 - Annex A

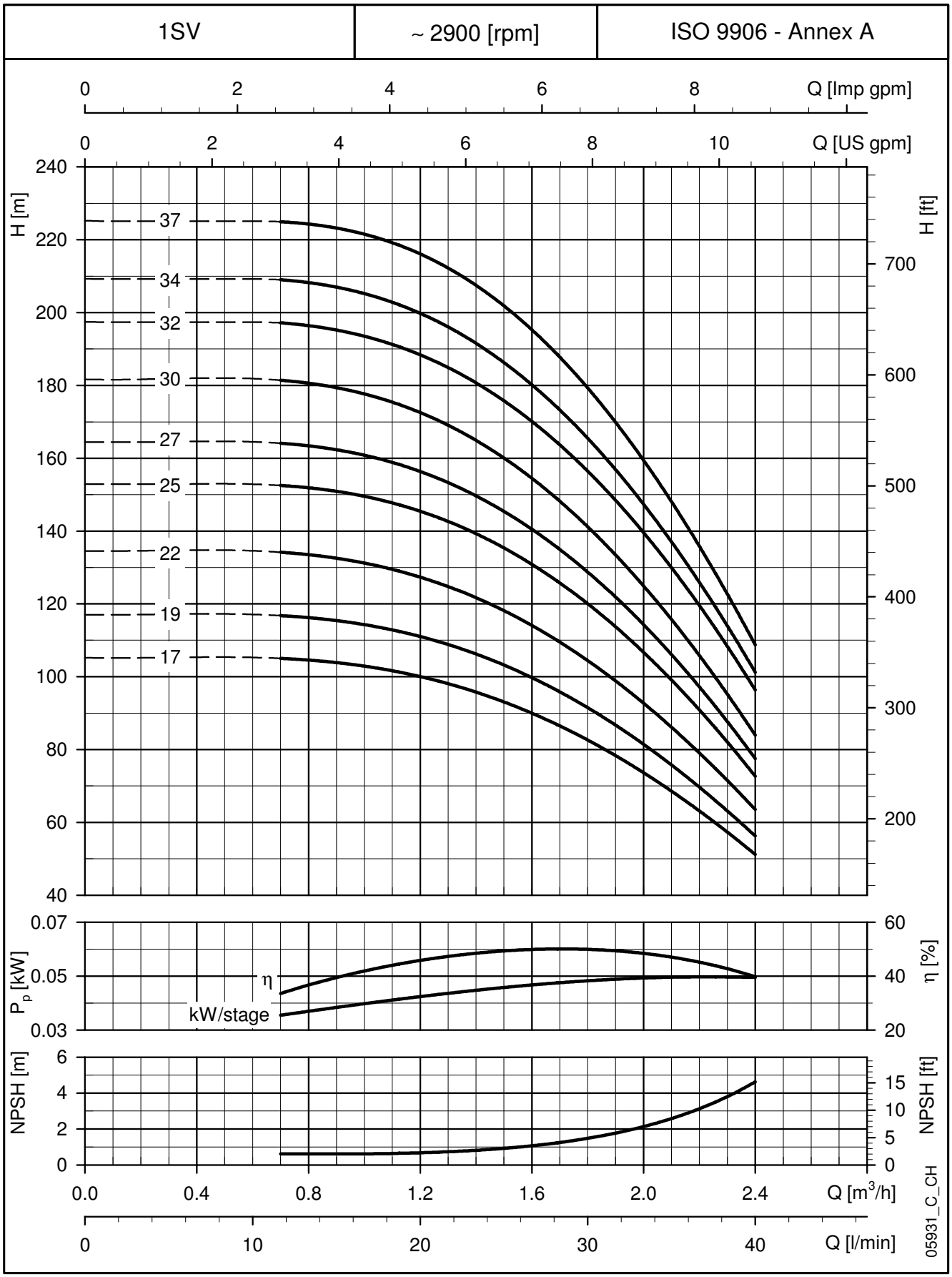

These performances are valid for liquids with density ρ = 1.0 Kg/dm³ and kinematic viscosity ν = 1 mm²/sec.

3SV SERIES
DIMENSIONS AND WEIGHTS AT 50 Hz, 2 POLES

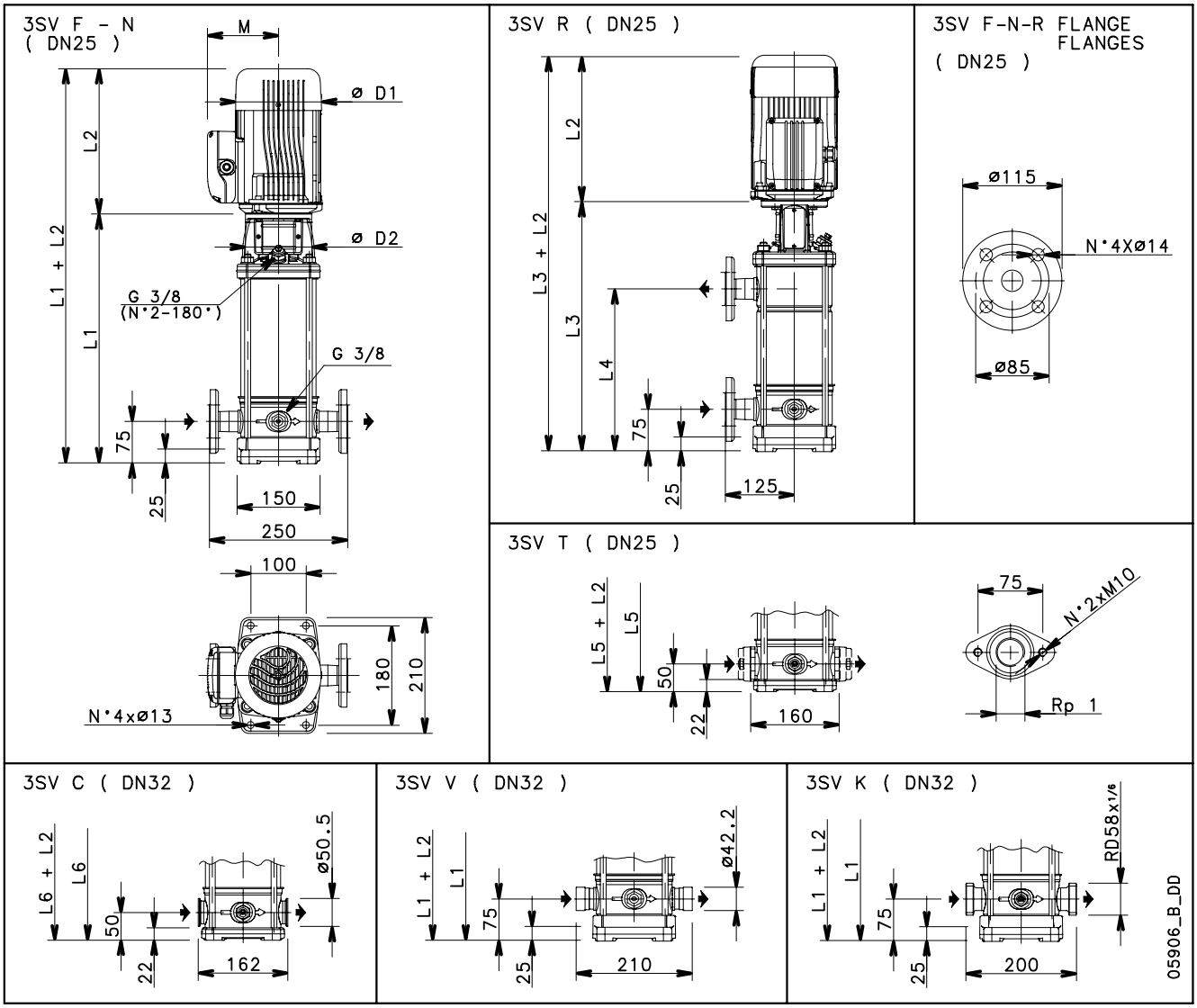

PUMP TYPE	MOTOR		DIMENSIONS (mm)													WEIGHT kg	
				L2						M		D1					ELECTRIC
	kW	SIZE	L1	1 ~	3 ~	L3	L4	L5	L6	1 ~	3 ~	1 ~	3 ~	D2	PUMP	PUMP
3SV02	0,37	71	278	209	209	-	-	253	253	111	111	120	120	105	8	12,8
3SV03	0,37	71	278	209	209	-	-	253	253	111	111	120	120	105	8,4	13,2
3SV04	0,37	71	298	209	209	-	-	273	273	111	111	120	120	105	8,8	13,6
3SV05	0,55	71	318	231	231	-	-	293	293	121	121	140	140	105	9,2	14
3SV06	0,55	71	338	231	231	-	-	313	313	121	121	140	140	105	9,7	16,4
3SV07	0,75	80	368	226	263	368	207	343	343	121	129	140	155	120	10,9	16,8
3SV08	0,75	80	388	226	263	388	227	363	363	121	129	140	155	120	11,3	21,9
3SV09	1,1	80	408	263	263	408	247	383	383	137	129	155	155	120	11,7	24,4
3SV10	1,1	80	428	263	263	428	267	403	403	137	129	155	155	120	12,1	24,8
3SV11	1,1	80	448	263	263	448	287	423	423	137	129	155	155	120	12,5	25,2
3SV12	1,1	80	468	263	263	468	307	443	443	137	129	155	155	120	13,3	25,6
3SV13	1,5	90	498	263	298	498	327	473	473	137	134	155	174	140	14	30,6
3SV14	1,5	90	518	263	298	518	347	493	493	137	134	155	174	140	14,4	31
3SV16	1,5	90	558	263	298	558	387	533	533	137	134	155	174	140	15,2	31,8
3SV19	2,2	90	618	298	298	618	447	593	593	151	134	174	174	140	16,4	34,4
3SV21	2,2	90	658	298	298	658	487	633	633	151	134	174	174	140	17,2	35,2
3SV23	2,2	90	698	298	298	698	527	-	673	151	134	174	174	140	18	36
3SV25	2,2	90	738	298	298	738	567	-	713	151	134	174	174	140	18,9	36,8
3SV27	3	100	788	-	298	788	607	-	763	-	134	-	174	160	20,7	42,6
3SV29	3	100	828	-	298	828	647	-	803	-	134	-	174	160	21,5	43,4
3SV31	3	100	868	-	298	868	687	-	843	-	134	-	174	160	22,3	44,2
3SV33	3	100	908	-	298	908	727	-	883	-	134	-	174	160	23,1	45

3SV SERIES
OPERATING CHARACTERISTICS AT 50 Hz, 2 POLES

3SV	~ 2900 [rpm]	ISO 9906 - Annex A

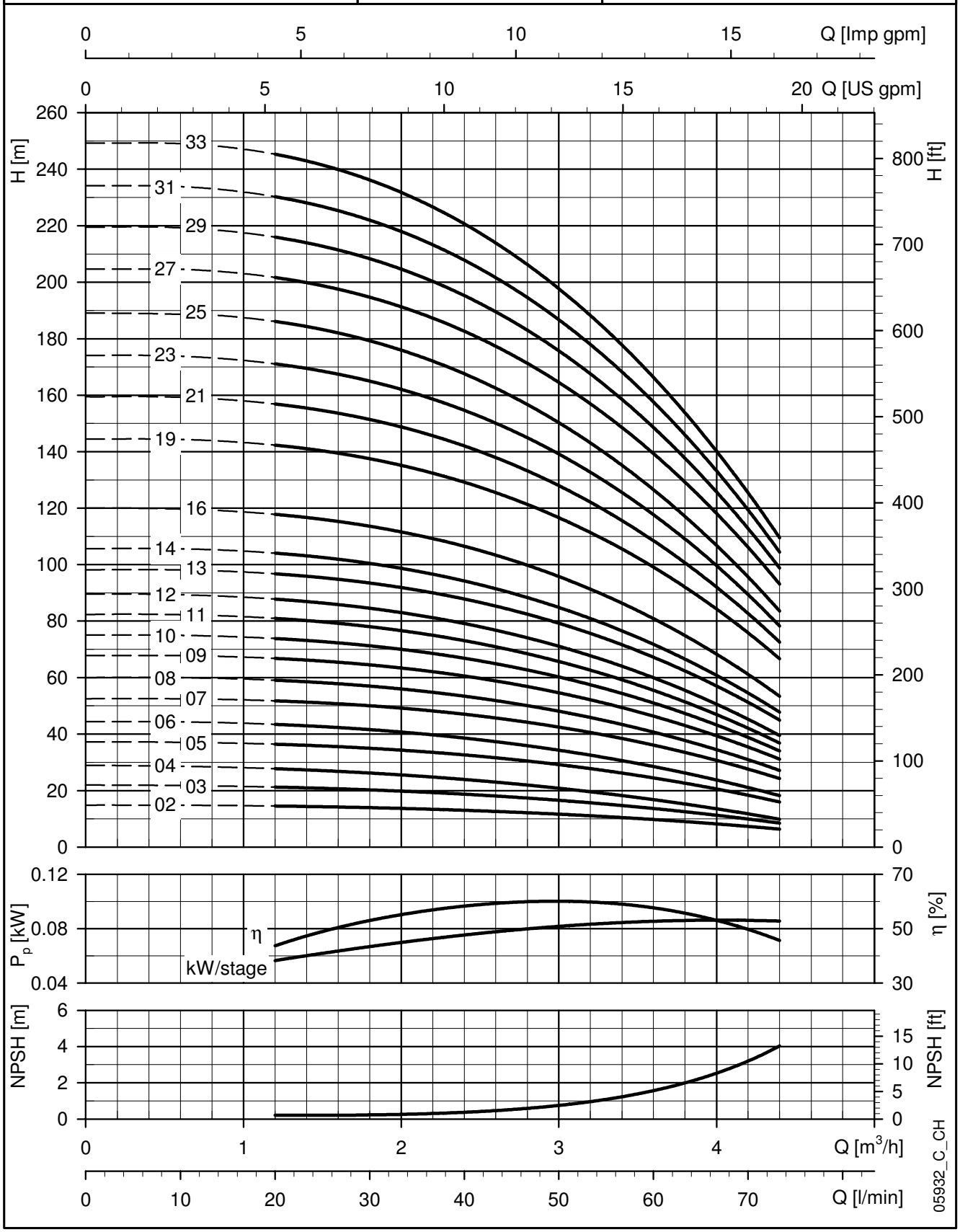

These performances are valid for liquids with density ρ = 1.0 Kg/dm^3 and kinematic viscosity ν = 1 mm^2/sec.

5SV SERIES
DIMENSIONS AND WEIGHTS AT 50 Hz, 2 POLES

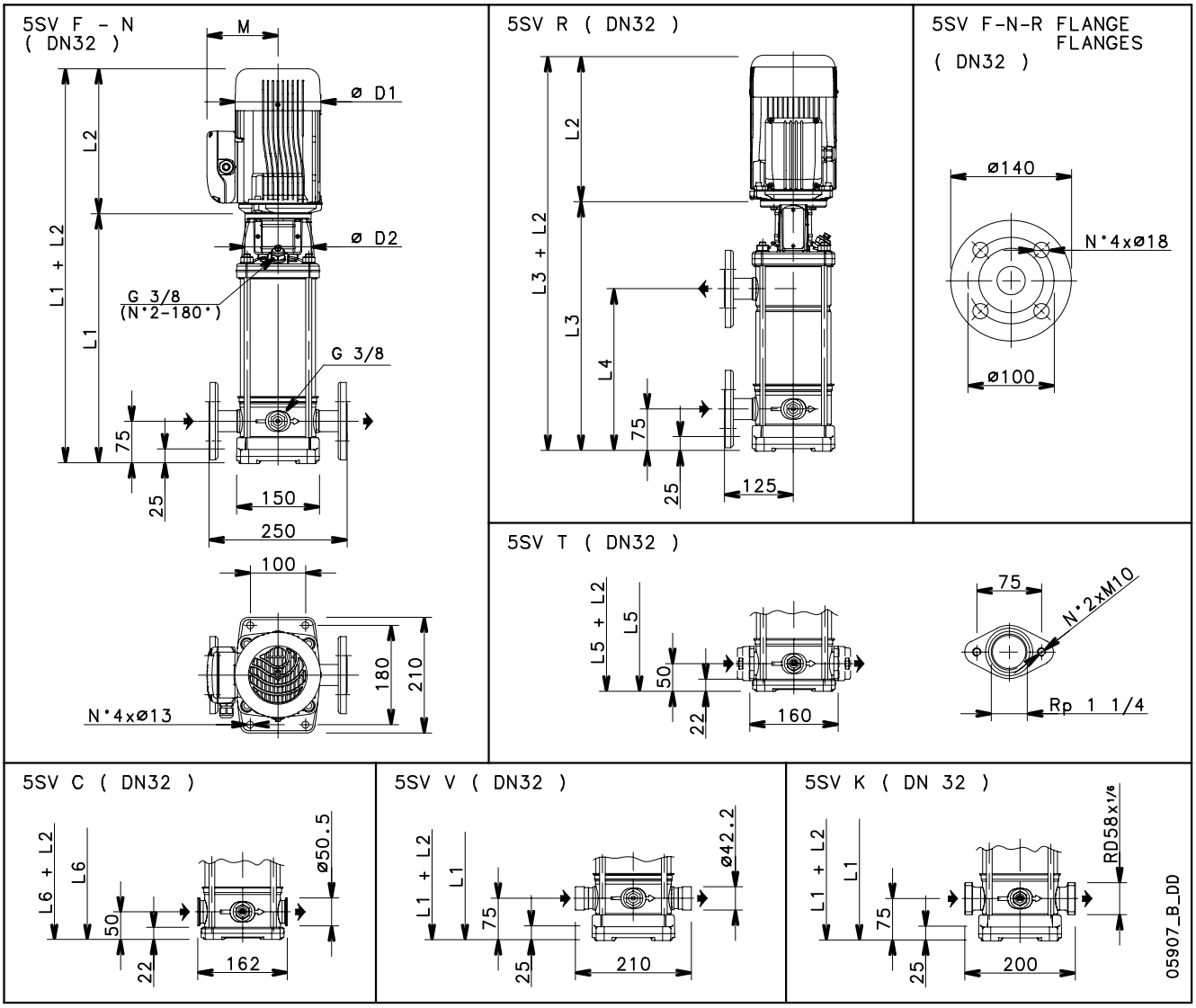

PUMP TYPE	MOTOR		DIMENSIONS (mm)													WEIGHT kg	
				L2						M		D1					ELECTRIC
	kW	SIZE	L1	1 ~	3 ~	L3	L4	L5	L6	1 ~	3 ~	1 ~	3 ~	D2	PUMP	PUMP
5SV02	0,37	71	268	209	209	-	-	243	243	111	111	120	120	105	8,4	13,2
5SV03	0,55	71	293	231	231	-	-	268	268	121	121	140	140	105	8,9	15,7
5SV04	0,55	71	318	231	231	-	-	293	293	121	121	140	140	105	9,4	16,1
5SV05	0,75	80	353	226	263	-	-	328	328	121	129	140	155	120	10,5	21,5
5SV06	1,1	80	378	263	263	-	-	353	353	137	129	155	155	120	11	23,6
5SV07	1,1	80	403	263	263	403	242	378	378	137	129	155	155	120	11,5	24
5SV08	1,1	80	428	263	263	428	267	403	403	137	129	155	155	120	12,1	24,5
5SV09	1,5	90	463	263	298	463	292	438	438	137	134	155	174	140	12,7	30,9
5SV10	1,5	90	488	263	298	488	317	463	463	137	134	155	174	140	13,1	31,3
5SV11	1,5	90	513	263	298	513	342	488	488	137	134	155	174	140	13,6	31,8
5SV12	2,2	90	538	298	298	538	367	513	513	151	134	174	174	140	14,1	32,3
5SV13	2,2	90	563	298	298	563	392	538	538	151	134	174	174	140	14,6	32,8
5SV14	2,2	90	588	298	298	588	417	563	563	151	134	174	174	140	15	33,2
5SV15	2,2	90	613	298	298	613	442	588	588	151	134	174	174	140	15,5	33,7
5SV16	2,2	90	638	298	298	638	467	613	613	151	134	174	174	140	16	34,2
5SV18	3	100	698	-	298	698	517	673	673	-	134	-	174	160	18	39
5SV21	3	100	773	-	298	773	592	748	748	-	134	-	174	160	19,4	40,4
5SV23	4	112	823	-	319	823	642	-	798	-	154	-	197	160	20,4	47
5SV25	4	112	873	-	319	873	692	-	848	-	154	-	197	160	21,3	48
5SV28	4	112	948	-	319	948	767	-	923	-	154	-	197	160	23	49,4
5SV30	5,5	132	1018	-	375	1018	817	-	993	-	168	-	214	300	28,1	65,7
5SV33	5,5	132	1093	-	375	1093	892	-	1068	-	168	-	214	300	29,5	67,1

5sv-2p50-en_a_td

5SV SERIES
OPERATING CHARACTERISTICS AT 50 Hz, 2 POLES

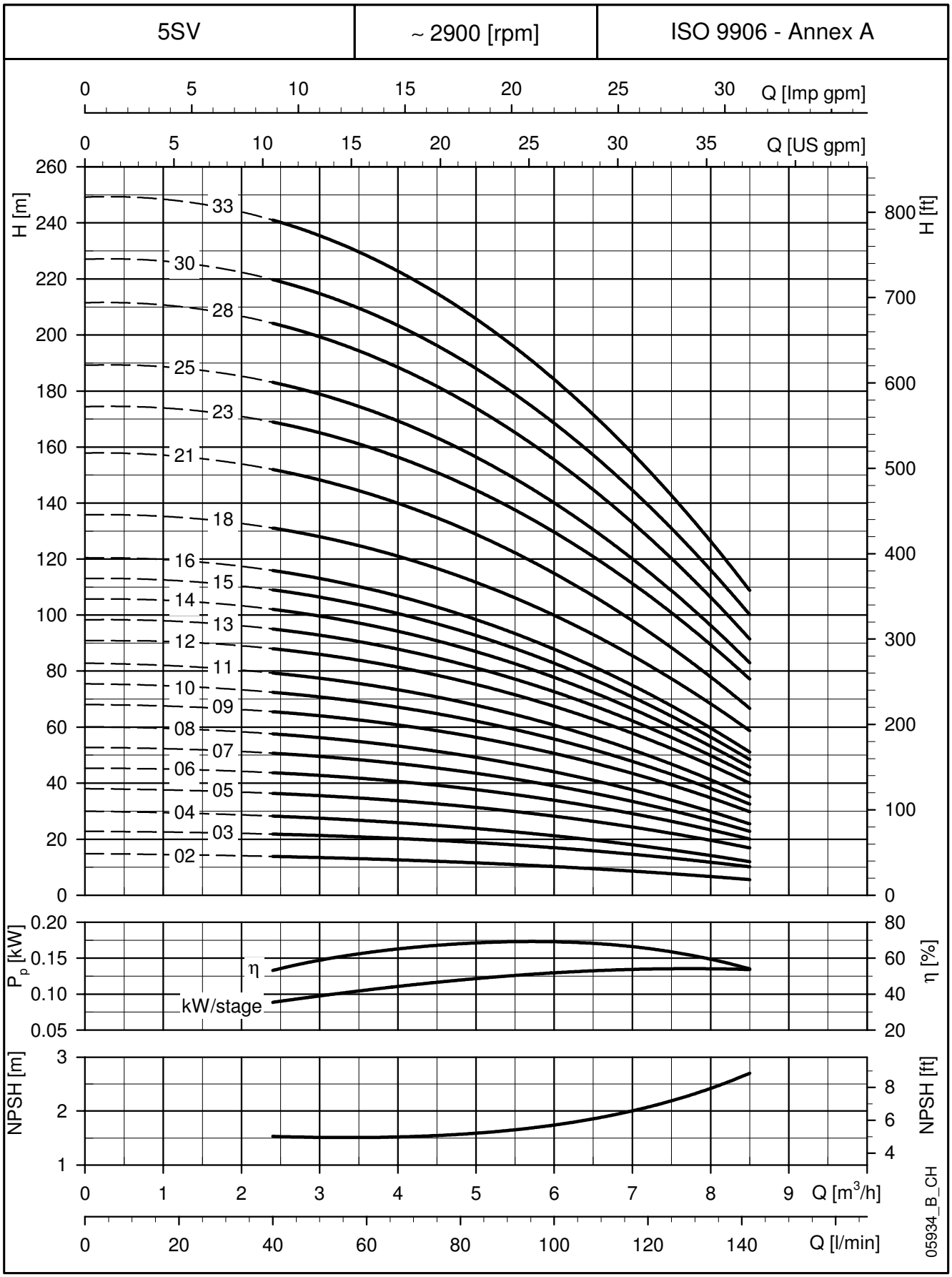

These performances are valid for liquids with density ρ = 1.0 Kg/dm³ and kinematic viscosity ν = 1 mm²/sec.

10SV SERIES
DIMENSIONS AND WEIGHTS AT 50 Hz, 2 POLES

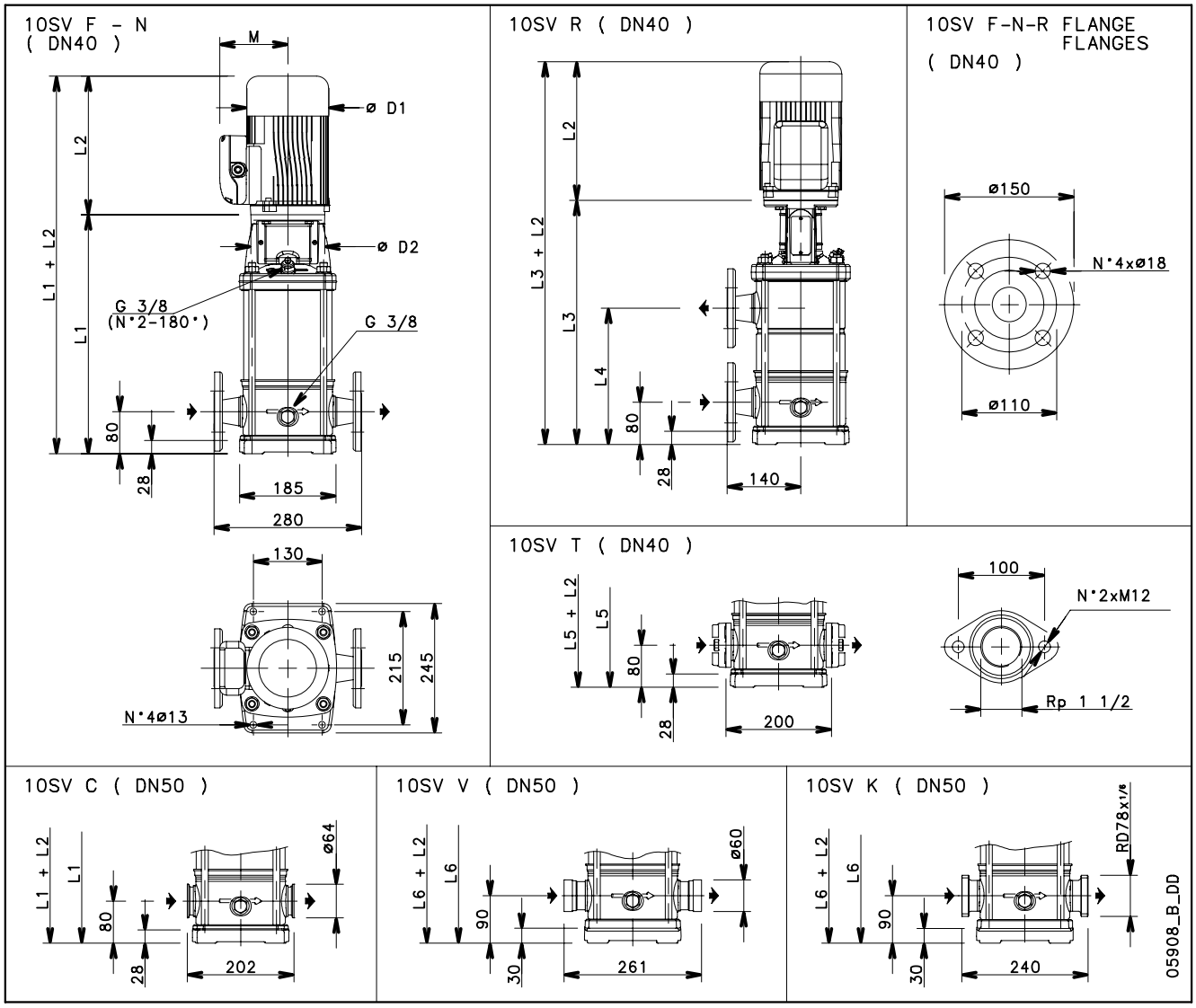

PUMP TYPE	MOTOR		DIMENSIONS (mm)													WEIGHT kg	
				L2						M		D1					ELECTRIC
	kW	SIZE	L1	1 ~	3 ~	L3	L4	L5	L6	1 ~	3 ~	1 ~	3 ~	D2	PUMP	PUMP
10SV01	0,75	80	357	226	263	-	-	357	367	121	129	140	155	120	14,2	25,4
10SV02	0,75	80	357	226	263	-	-	357	367	121	129	140	155	120	15,1	26,3
10SV03	1,1	80	389	263	263	-	-	389	399	137	129	155	155	120	16,1	29
10SV04	1,5	90	431	263	298	-	-	431	441	137	134	155	174	140	17,6	33,8
10SV05	2,2	90	463	298	298	463	259	463	473	151	134	174	174	140	18,5	36,7
10SV06	2,2	90	495	298	298	495	291	495	505	151	134	174	174	140	19,7	37,9
10SV07	3	100	537	-	298	537	323	537	547	-	134	-	174	160	21,5	42,5
10SV08	3	100	569	-	298	569	355	569	579	-	134	-	174	160	22,4	43,4
10SV09	4	112	601	-	319	601	387	601	611	-	154	-	197	160	23,3	49,7
10SV10	4	112	633	-	319	633	419	633	643	-	154	-	197	160	24,3	50,7
10SV11	4	112	665	-	319	665	451	665	675	-	154	-	197	160	25,2	52
10SV13	5,5	132	796	-	375	796	515	796	806	-	168	-	214	300	33,1	71
10SV15	5,5	132	860	-	375	860	579	-	870	-	168	-	214	300	35	73
10SV17	7,5	132	924	-	367	924	643	-	934	-	191	-	256	300	36,9	93
10SV18	7,5	132	956	-	367	956	675	-	966	-	191	-	256	300	37,8	94
10SV20	7,5	132	1020	-	367	1020	739	-	1030	-	191	-	256	300	39,6	96
10SV21	11	160	1082	-	428	1082	771	-	1092	-	191	-	256	350	42,2	113

10SV SERIES
OPERATING CHARACTERISTICS AT 50 Hz, 2 POLES

10SV	~ 2900 [rpm]	ISO 9906 - Annex A

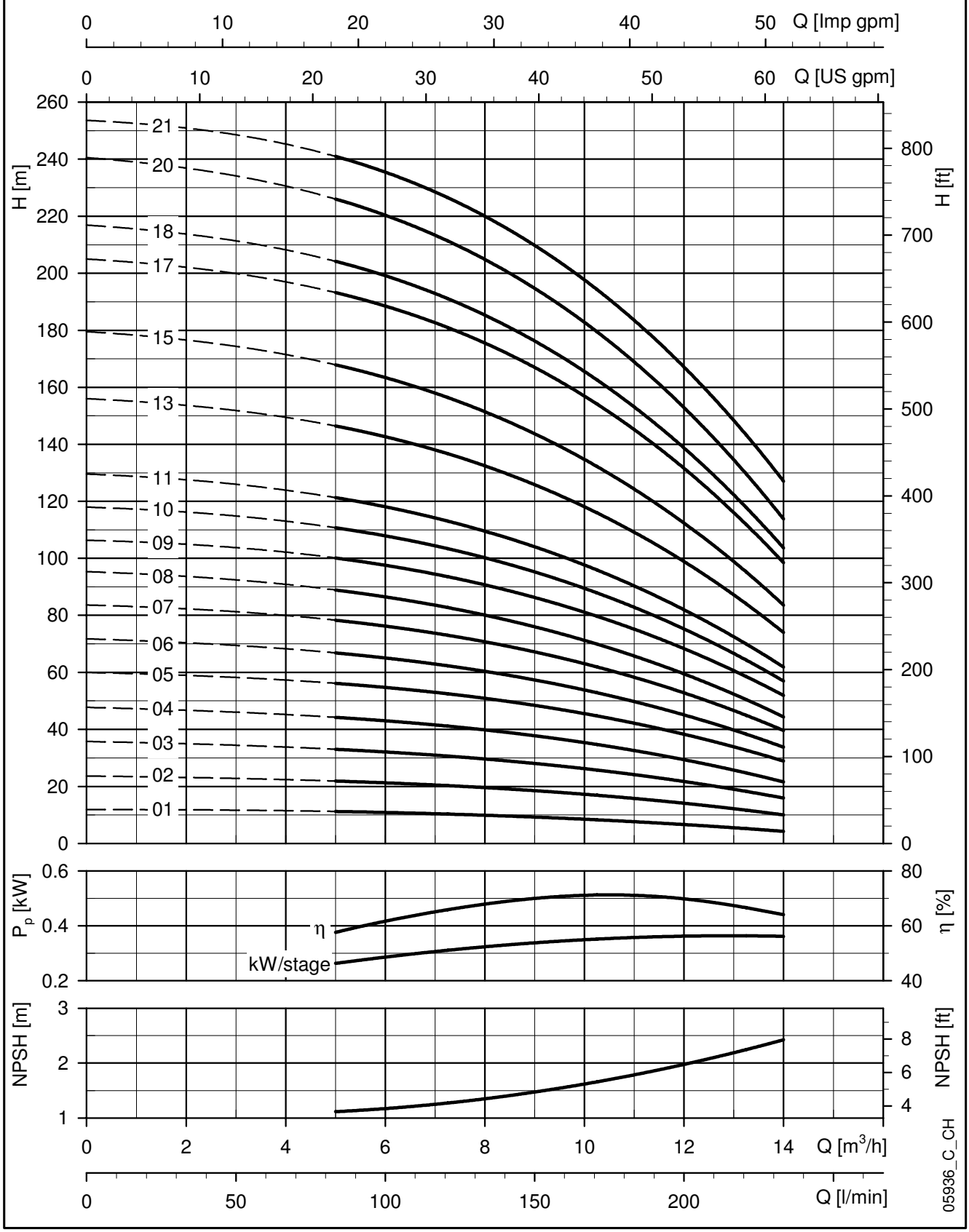

These performances are valid for liquids with density ρ = 1.0 Kg/dm^3 and kinematic viscosity ν = 1 mm^2/sec.

15SV SERIES
DIMENSIONS AND WEIGHTS AT 50 Hz, 2 POLES

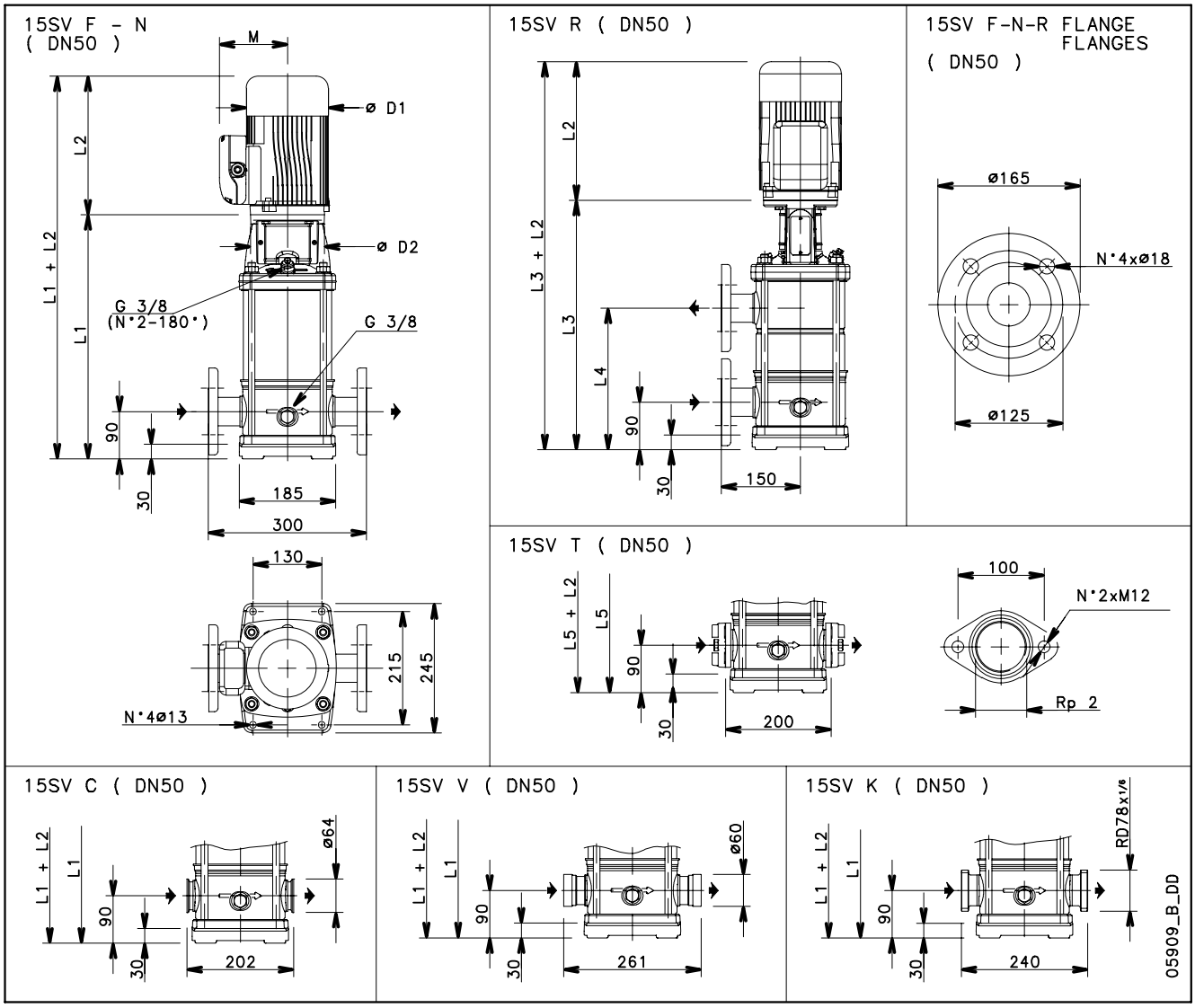

PUMP TYPE	MOTOR		DIMENSIONS (mm)												WEIGHT kg	
				L2					M		D1					ELECTRIC
	kW	SIZE	L1	1 ~	3 ~	L3	L4	L5	1 ~	3 ~	1 ~	3 ~	D2	PUMP	PUMP
15SV01	1,1	80	399	263	263	-	-	399	137	129	155	155	120	15	28,2
15SV02	2,2	90	409	298	298	-	-	409	151	134	174	174	140	16,8	34,7
15SV03	3	100	467	-	298	-	-	467	-	134	-	174	160	19	40
15SV04	4	112	515	-	319	515	301	515	-	154	-	197	160	20,3	46,8
15SV05	4	112	563	-	319	563	349	563	-	154	-	197	160	21,5	47,9
15SV06	5,5	132	678	-	375	678	397	678	-	168	-	214	300	28,9	67
15SV07	5,5	132	726	-	375	726	445	726	-	168	-	214	300	30,2	68
15SV08	7,5	132	774	-	367	774	493	774	-	191	-	256	300	31,5	88
15SV09	7,5	132	822	-	367	822	541	822	-	191	-	256	300	32,8	90
15SV10	11	160	900	-	428	900	589	900	-	191	-	256	350	37	108
15SV11	11	160	948	-	428	948	637	-	-	191	-	256	350	38,3	109
15SV13	11	160	1044	-	428	1044	733	-	-	191	-	256	350	41	112
15SV15	15	160	1140	-	494	1140	829	-	-	240	-	313	350	43,7	146
15SV17	15	160	1236	-	494	1236	925	-	-	240	-	313	350	46,7	149

15sv-2p50_a_td

15SV SERIES
OPERATING CHARACTERISTICS AT 50 Hz, 2 POLES

15SV	~ 2900 [rpm]	ISO 9906 - Annex A

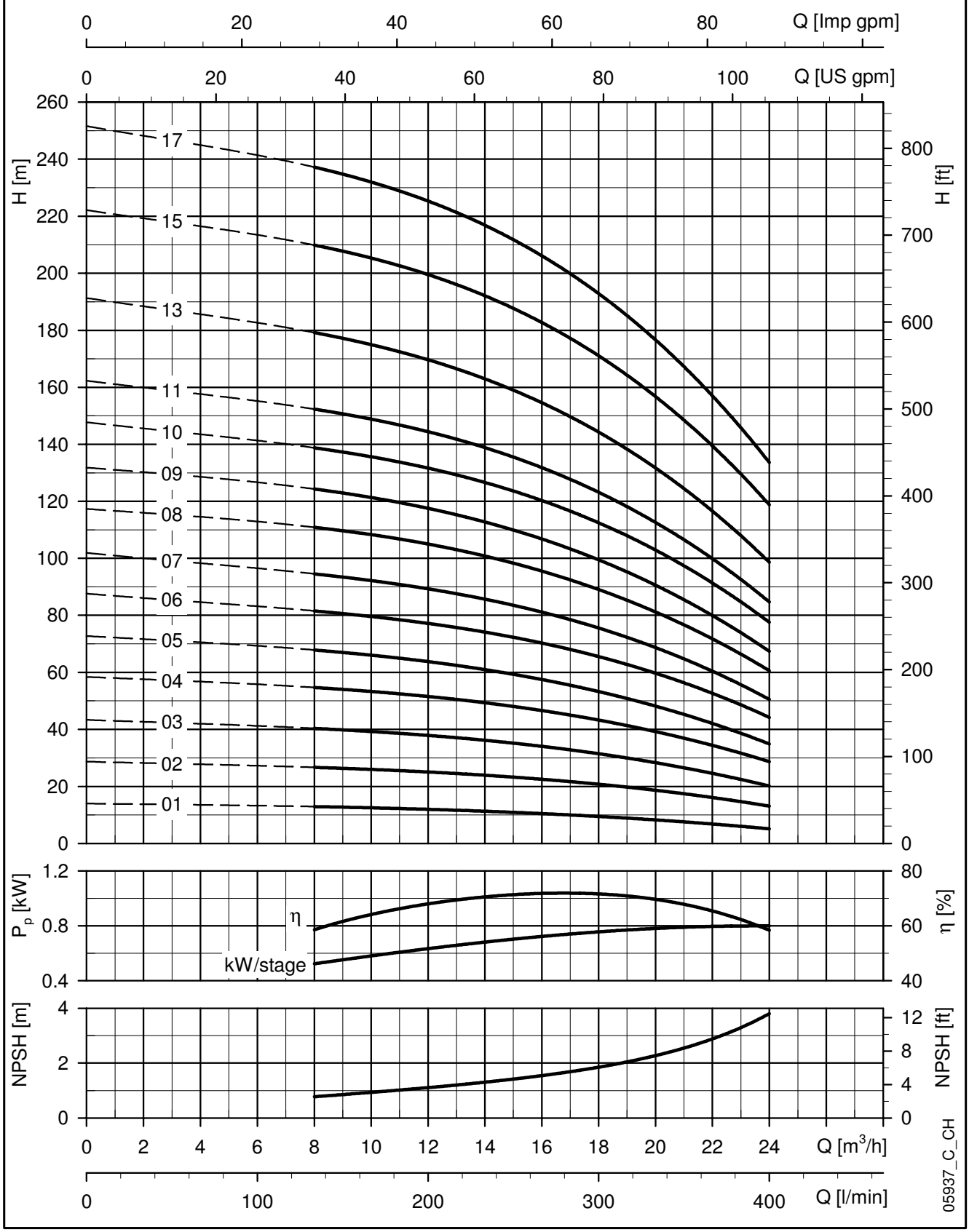

These performances are valid for liquids with density ρ = 1.0 Kg/dm^3 and kinematic viscosity ν = 1 mm^2/sec.

22SV SERIES
DIMENSIONS AND WEIGHTS AT 50 Hz, 2 POLES

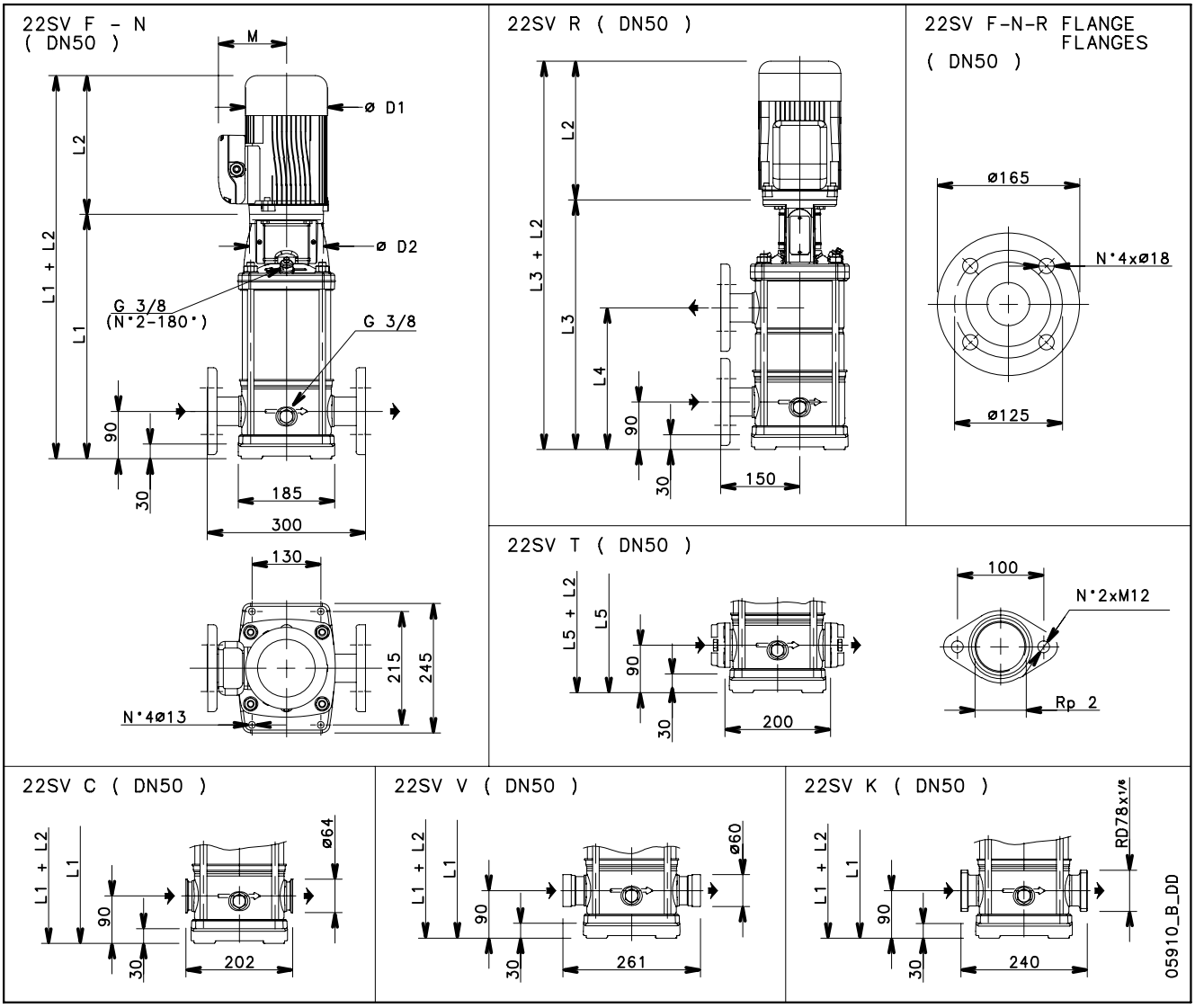

PUMP TYPE	MOTOR		DIMENSIONS (mm)												WEIGHT kg	
				L2					M		D1					ELECTRIC
	kW	SIZE	L1	1 ~	3 ~	L3	L4	L5	1 ~	3 ~	1 ~	3 ~	D2	PUMP	PUMP
22SV01	1,1	80	399	263	263	-	-	399	137	129	155	155	120	15,5	28,3
22SV02	2,2	90	409	298	298	-	-	409	151	134	174	174	140	17,2	35,4
22SV03	3	100	467	-	298	-	-	467	-	134	-	174	160	19,4	40,4
22SV04	4	112	515	-	319	515	301	515	-	154	-	197	160	20,7	47,1
22SV05	5,5	132	630	-	375	630	349	630	-	168	-	214	300	26,7	65
22SV06	7,5	132	678	-	367	678	397	678	-	191	-	256	300	28	84
22SV07	7,5	132	726	-	367	726	445	726	-	191	-	256	300	29,3	86
22SV08	11	160	804	-	428	804	493	804	-	191	-	256	350	33,1	104
22SV09	11	160	852	-	428	852	541	852	-	191	-	256	350	34,4	105
22SV10	11	160	900	-	428	900	589	900	-	191	-	256	350	35,8	107
22SV12	15	160	996	-	494	996	685	-	-	240	-	313	350	38,4	141
22SV14	15	160	1092	-	494	1092	781	-	-	240	-	313	350	41,1	144
22SV17	18,5	160	1236	-	494	1236	925	-	-	240	-	313	350	45,1	156

22sv-2p50-en_a_td

22SV SERIES
OPERATING CHARACTERISTICS AT 50 Hz, 2 POLES

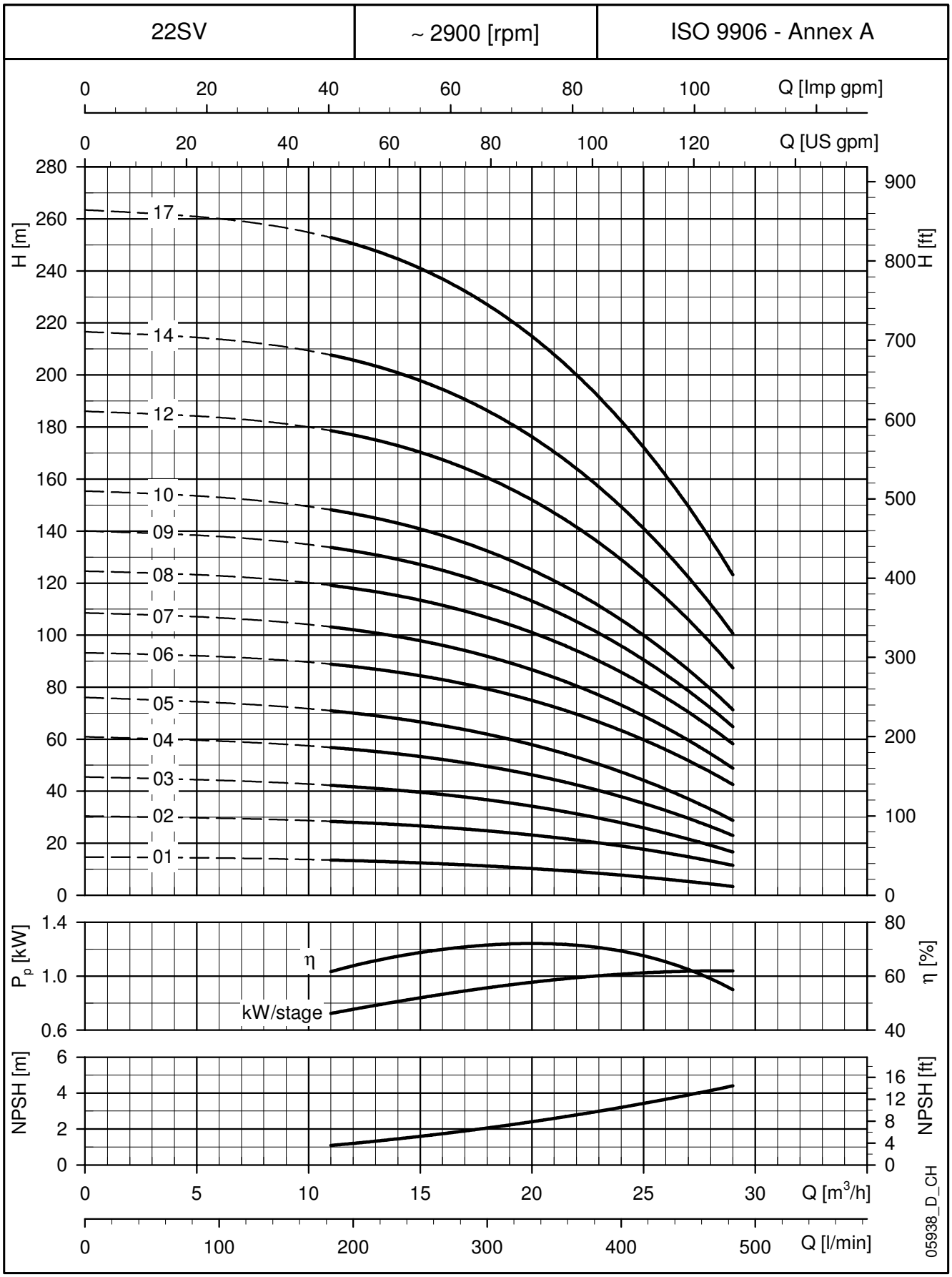

These performances are valid for liquids with density ρ = 1.0 Kg/dm³ and kinematic viscosity ν = 1 mm²/sec.

33SV SERIES
DIMENSIONS AND WEIGHTS AT 50 Hz, 2 POLES

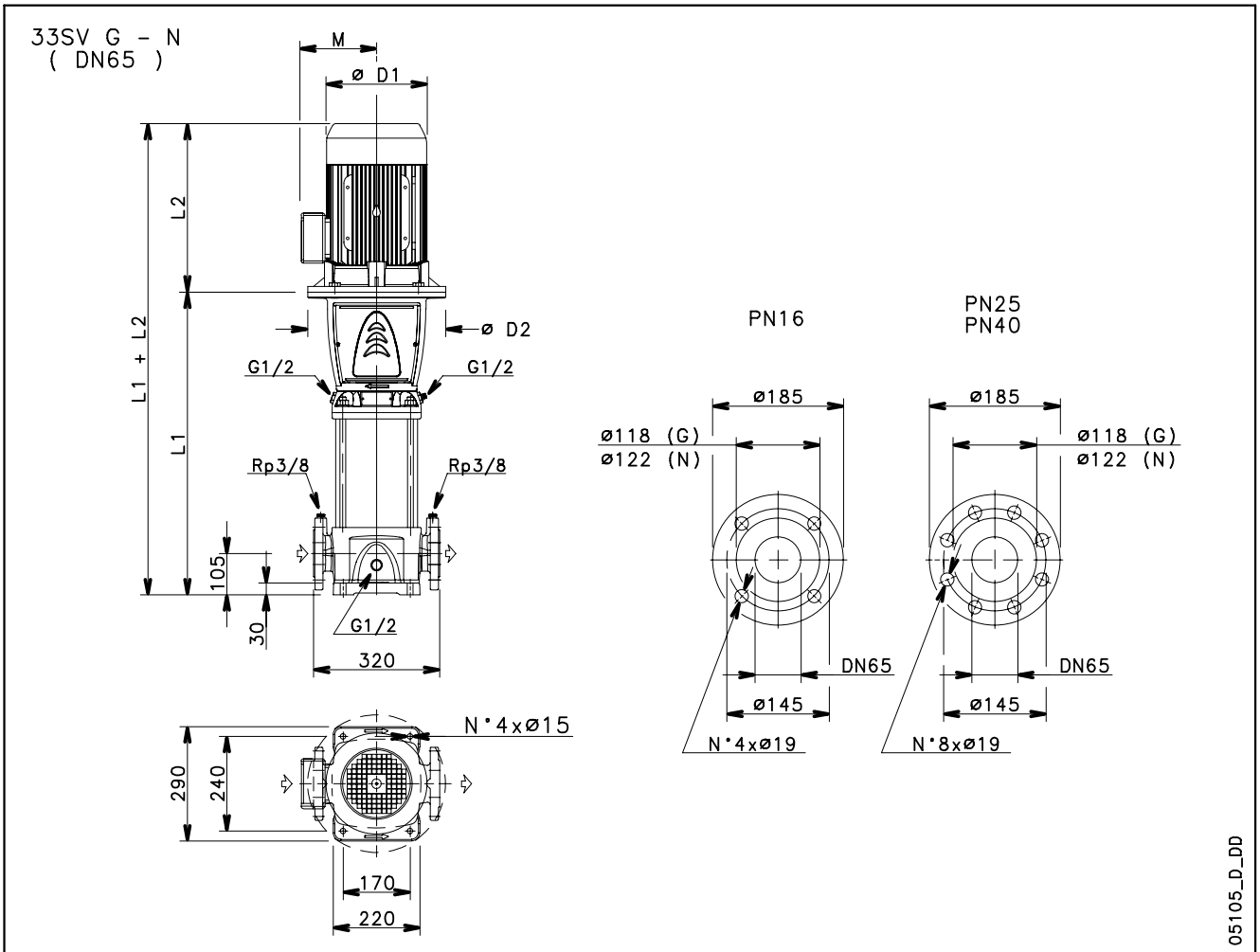

PUMP TYPE	MOTOR		DIMENSIONS (mm)						WEIGHT kg	
	kW	SIZE	L1	L2	D1	D2	M	PN	PUMP	ELECTRIC PUMP
33SV1/1A	2,2	90	489	298	174	164	134	16	52	73
33SV1	3	100	489	298	174	164	134	16	52	73
33SV2/2A	4	112	564	319	197	164	154	16	56	82,5
33SV2/1A	4	112	564	319	197	164	154	16	56	82,5
33SV2	5,5	132	584	375	214	300	168	16	61	98,5
33SV3/2A	5,5	132	659	375	214	300	168	16	65	103
33SV3/1A	7,5	132	659	367	256	300	191	16	65	121
33SV3	7,5	132	659	367	256	300	191	16	65	121
33SV4/2A	7,5	132	734	367	256	300	191	16	69	125
33SV4/1A	11	160	769	428	256	350	191	16	73	143
33SV4	11	160	769	428	256	350	191	16	73	143
33SV5/2A	11	160	844	428	256	350	191	16	77	147
33SV5/1A	11	160	844	428	256	350	191	16	77	147
33SV5	15	160	844	494	313	350	240	16	77	179
33SV6/2A	15	160	919	494	313	350	240	16	81	183
33SV6/1A	15	160	919	494	313	350	240	25	81	183
33SV6	15	160	919	494	313	350	240	25	81	183
33SV7/2A	15	160	994	494	313	350	240	25	84	186
33SV7/1A	18,5	160	994	494	313	350	240	25	84	195

PUMP TYPE	MOTOR		DIMENSIONS (mm)						WEIGHT kg	
	kW	SIZE	L1	L2	D1	D2	M	PN	PUMP	ELECTRIC PUMP
33SV7	18,5	160	994	494	313	350	240	25	84	195
33SV8/2A	18,5	160	1069	494	313	350	240	25	88	199
33SV8/1A	18,5	160	1069	494	313	350	240	25	88	199
33SV8	22	180	1069	494	313	350	240	25	89	210
33SV9/2A	22	180	1144	494	313	350	240	25	93	214
33SV9/1A	22	180	1144	494	313	350	240	25	93	214
33SV9	22	180	1144	494	313	350	240	25	93	214
33SV10/2A	22	180	1219	494	313	350	240	25	97	218
33SV10/1A	30	200	1219	657	402	400	317	25	104	319
33SV10	30	200	1219	657	402	400	317	25	104	319
33SV11/2A	30	200	1294	657	402	400	317	40	118	333
33SV11/1A	30	200	1294	657	402	400	317	40	118	333
33SV11	30	200	1294	657	402	400	317	40	118	333
33SV12/2A	30	200	1369	657	402	400	317	40	122	337
33SV12/1A	30	200	1369	657	402	400	317	40	122	337
33SV12	30	200	1369	657	402	400	317	40	122	337
33SV13/2A	30	200	1444	657	402	400	317	40	127	342
33SV13/1A	30	200	1444	657	402	400	317	40	127	342

33SV SERIES
OPERATING CHARACTERISTICS AT 50 Hz, 2 POLES

33SV	~ 2900 [rpm]	ISO 9906 - Annex A

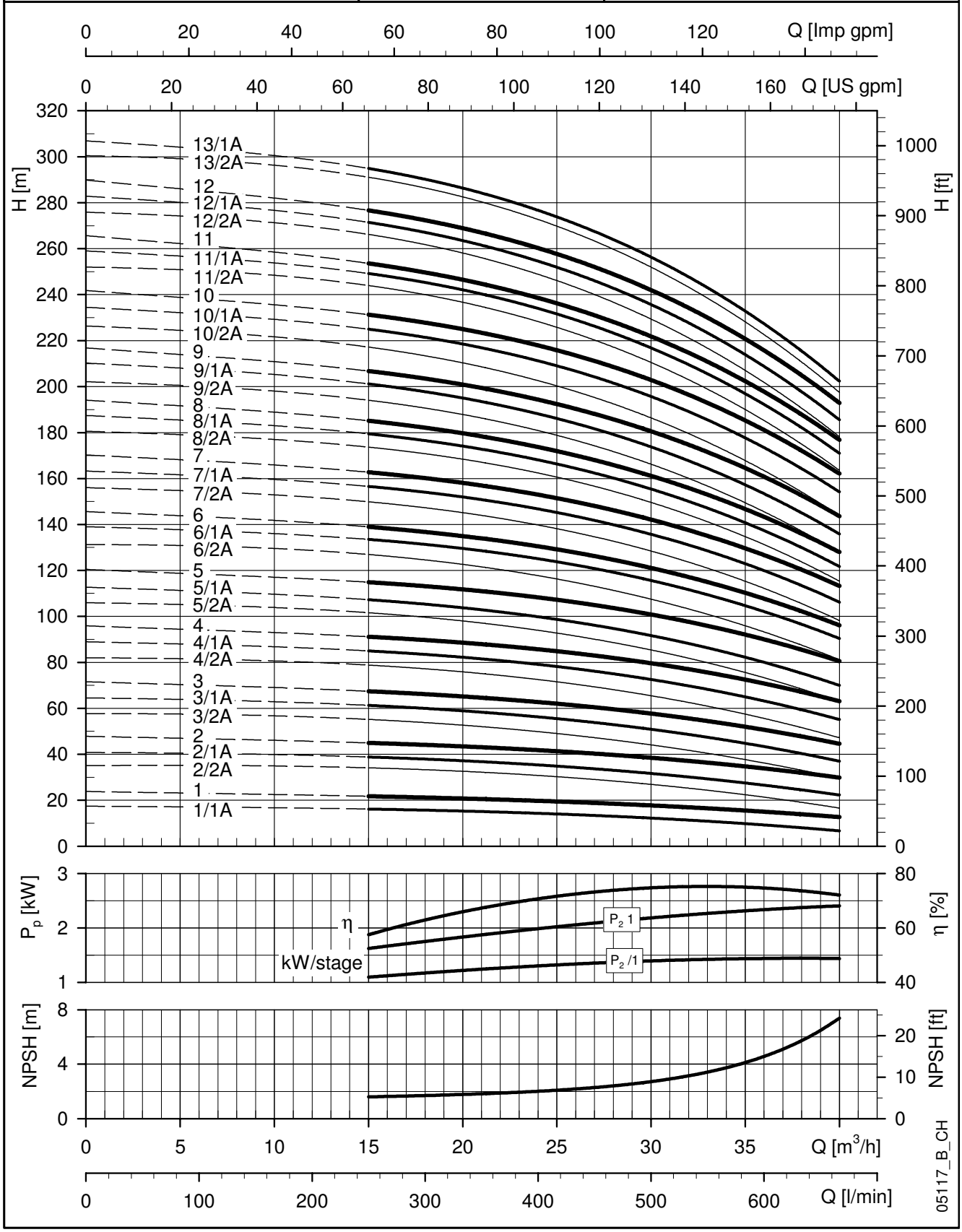

These performances are valid for liquids with density ρ = 1.0 Kg/dm³ and kinematic viscosity ν = 1 mm²/sec.

46SV SERIES
DIMENSIONS AND WEIGHTS AT 50 Hz, 2 POLES

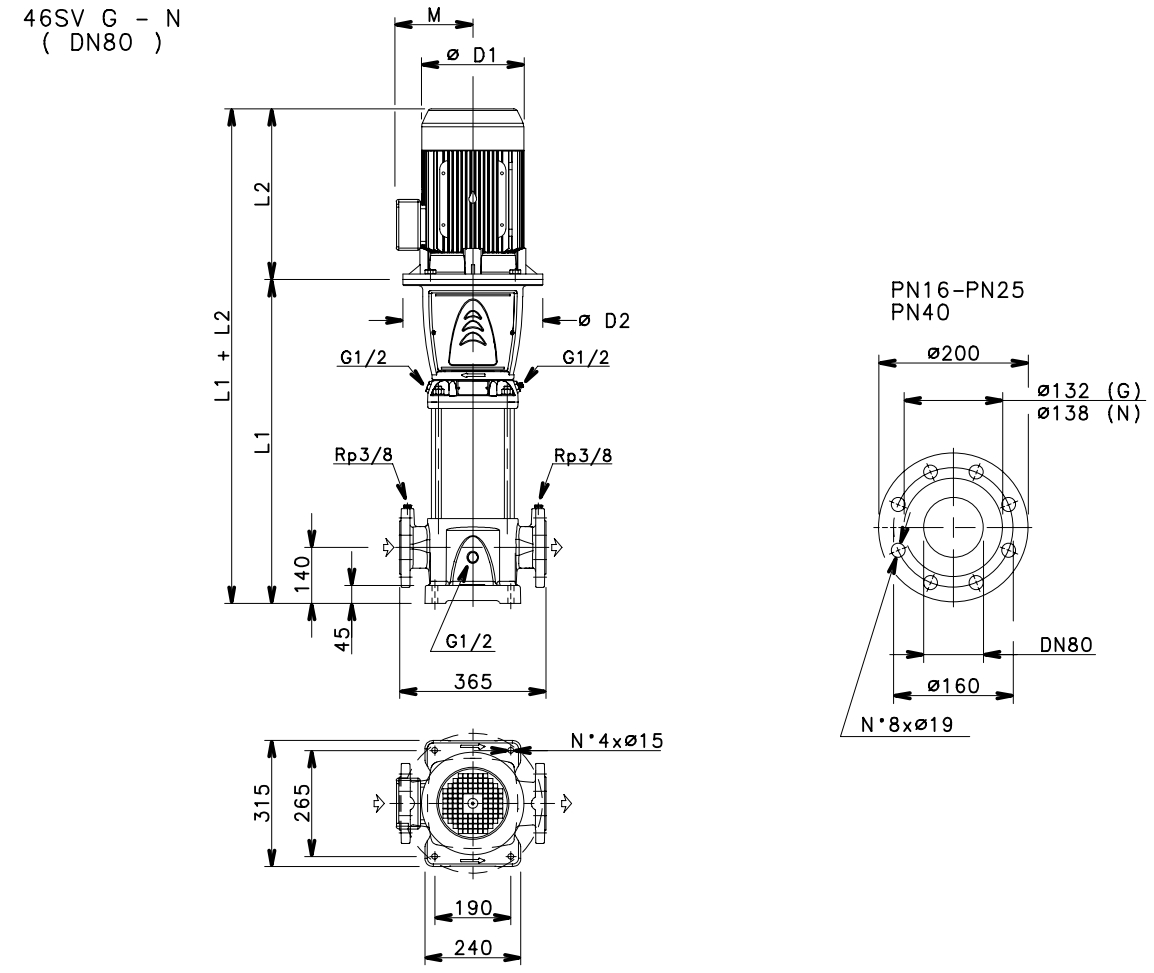

PUMP TYPE	MOTOR		DIMENSIONS (mm)						WEIGHT kg	
	kW	SIZE	L1	L2	D1	D2	M	PN	PUMP	ELECTRIC PUMP
46SV1/1A	3	100	529	298	174	164	134	16	58	79
46SV1	4	112	529	319	197	164	154	16	58	84,5
46SV2/2A	5,5	132	624	375	214	300	168	16	66	104
46SV2	7,5	132	624	367	256	300	191	16	66	122
46SV3/2A	11	160	734	428	256	350	191	16	74	144
46SV3	11	160	734	428	256	350	191	16	74	144
46SV4/2A	15	160	809	494	313	350	240	16	78	180
46SV4	15	160	809	494	313	350	240	16	78	180
46SV5/2A	18,5	160	884	494	313	350	240	16	82	193
46SV5	18,5	160	884	494	313	350	240	16	82	193
46SV6/2A	22	180	959	494	313	350	240	25	87	208
46SV6	22	180	959	494	313	350	240	25	87	208
46SV7/2A	30	200	1034	657	402	400	317	25	97	312
46SV7	30	200	1034	657	402	400	317	25	97	312
46SV8/2A	30	200	1109	657	402	400	317	25	101	316
46SV8	30	200	1109	657	402	400	317	25	101	316
46SV9/2A	30	200	1184	657	402	400	317	25	105	320
46SV9	37	200	1184	657	402	400	317	25	105	335
46SV10/2A	37	200	1259	657	402	400	317	40	114	344

PUMP TYPE	MOTOR		DIMENSIONS (mm)						WEIGHT kg	
	kW	SIZE	L1	L2	D1	D2	M	PN	PUMP	ELECTRIC PUMP
46SV10	37	200	1259	657	402	400	317	40	114	344
46SV11/2A	45	225	1334	746	455	450	384	40	126	482
46SV11	45	225	1334	746	455	450	384	40	126	482
46SV12/2A	45	225	1409	746	455	450	384	40	131	487
46SV12	45	225	1409	746	455	450	384	40	131	487
46SV13/2A	45	225	1484	746	455	450	384	40	135	491

46SV SERIES
OPERATING CHARACTERISTICS AT 50 Hz, 2 POLES

46SV	~ 2900 [rpm]	ISO 9906 - Annex A

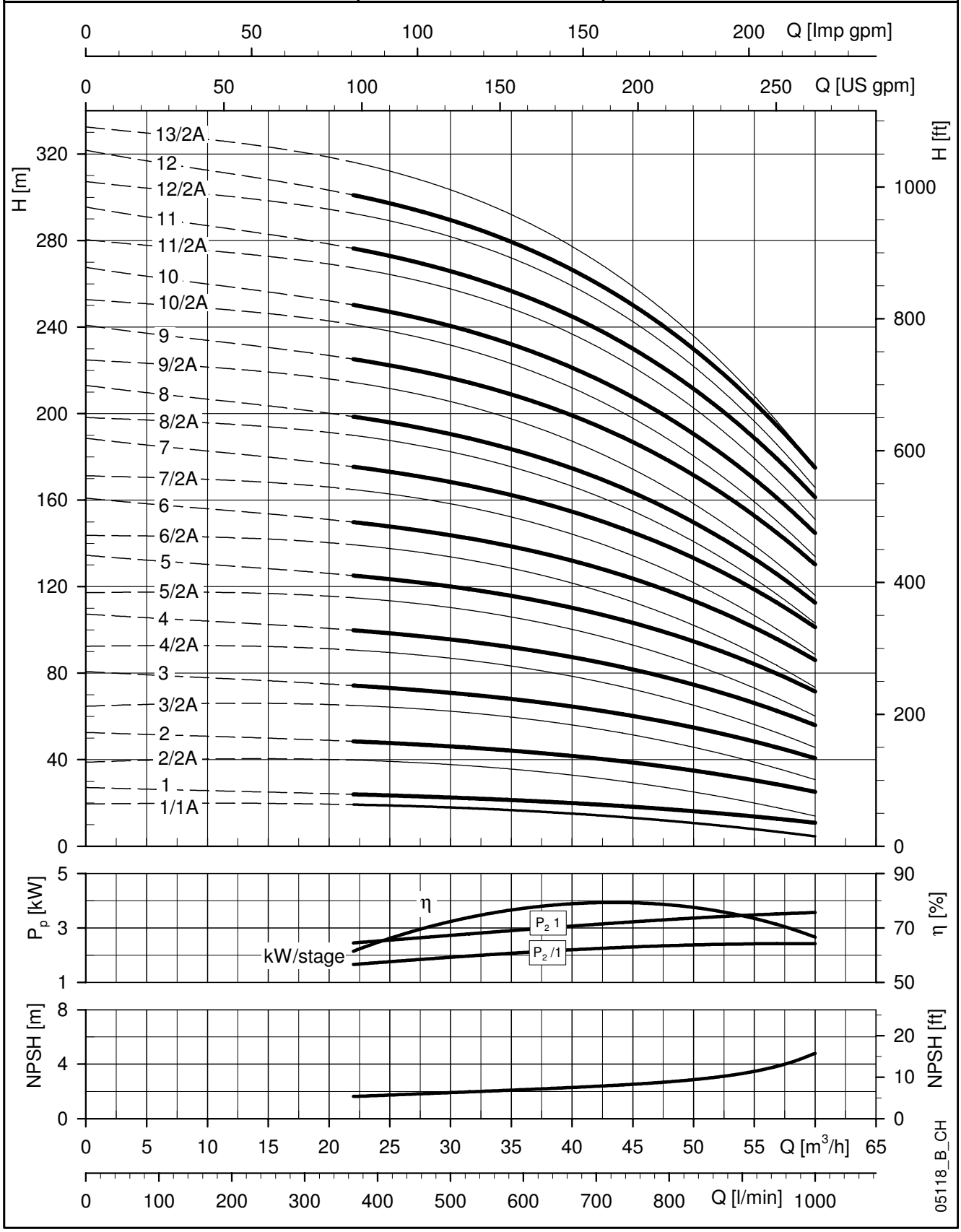

These performances are valid for liquids with density ρ = 1.0 Kg/dm³ and kinematic viscosity ν = 1 mm²/sec.

66SV SERIES
DIMENSIONS AND WEIGHTS AT 50 Hz, 2 POLES

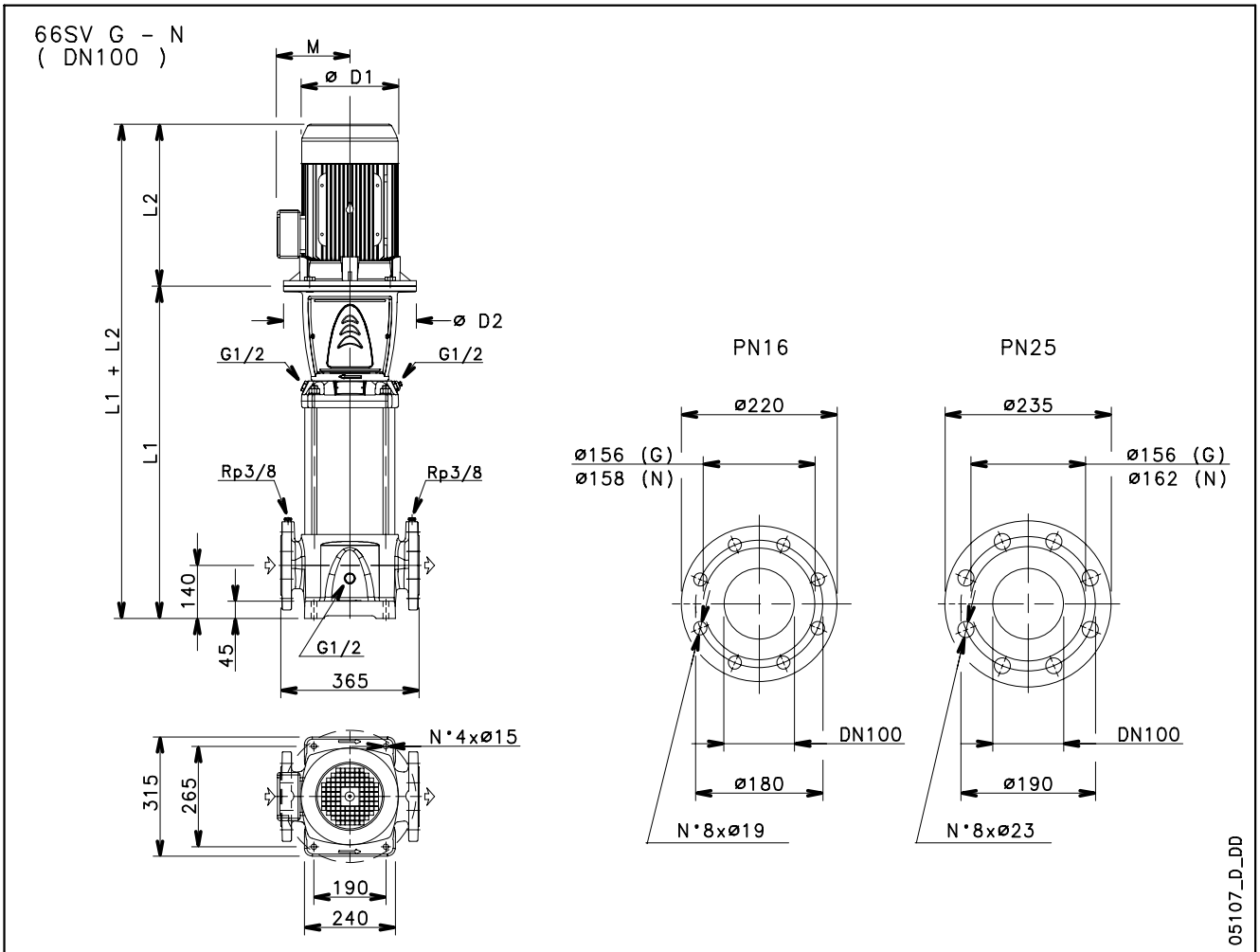

PUMP TYPE	MOTOR		DIMENSIONS (mm)						WEIGHT kg	
	kW	SIZE	L1	L2	D1	D2	M	PN	PUMP	ELECTRIC PUMP
66SV1/1A	4	112	554	319	197	164	154	16	66	92,5
66SV1	5,5	132	574	375	214	300	168	16	72	110
66SV2/2A	7,5	132	664	367	256	300	191	16	77	133
66SV2/1A	11	160	699	428	256	350	191	16	81	151
66SV2	11	160	699	428	256	350	191	16	81	151
66SV3/2A	15	160	789	494	313	350	240	16	86	188
66SV3/1A	15	160	789	494	313	350	240	16	86	188
66SV3	18,5	160	789	494	313	350	240	16	86	197
66SV4/2A	18,5	160	879	494	313	350	240	16	92	203
66SV4/1A	22	180	879	494	313	350	240	16	93	214
66SV4	22	180	879	494	313	350	240	16	93	214
66SV5/2A	30	200	969	657	402	400	317	16	105	320
66SV5/1A	30	200	969	657	402	400	317	16	105	320
66SV5	30	200	969	657	402	400	317	16	105	320
66SV6/2A	30	200	1059	657	402	400	317	25	113	328
66SV6/1A	30	200	1059	657	402	400	317	25	113	328
66SV6	37	200	1059	657	402	400	317	25	113	343
66SV7/2A	37	200	1149	657	402	400	317	25	118	348
66SV7/1A	37	200	1149	657	402	400	317	25	118	348

PUMP TYPE	MOTOR		DIMENSIONS (mm)						WEIGHT kg	
	kW	SIZE	L1	L2	D1	D2	M	PN	PUMP	ELECTRIC PUMP
66SV7	45	225	1149	746	455	450	384	25	122	478
66SV8/2A	45	225	1239	746	455	450	384	25	127	483
66SV8/1A	45	225	1239	746	455	450	384	25	127	483
66SV8	45	225	1239	746	455	450	384	25	127	483

66sv-2p50-en_a_td

66SV SERIES
OPERATING CHARACTERISTICS AT 50 Hz, 2 POLES

66SV	~ 2900 [rpm]	ISO 9906 - Annex A

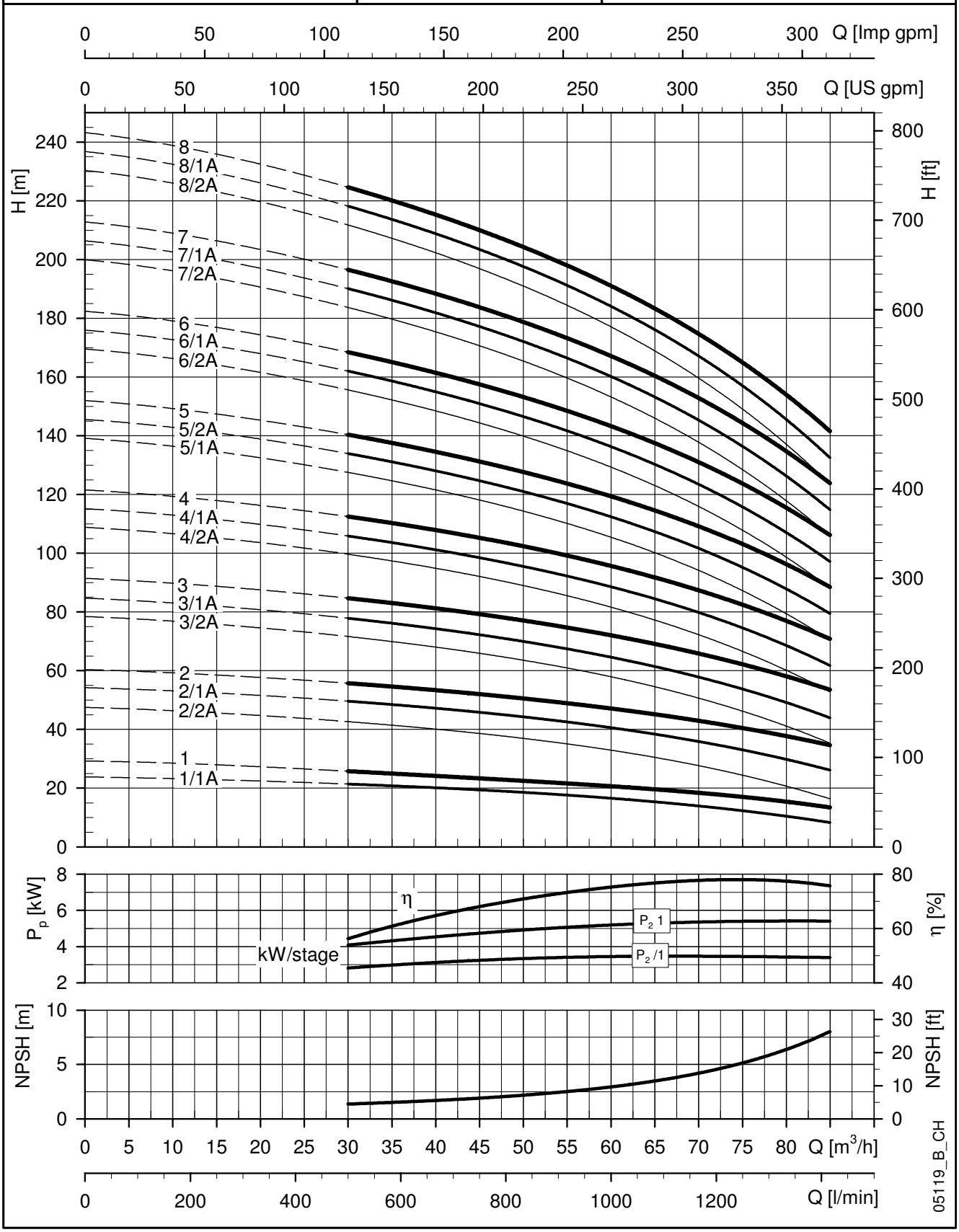

These performances are valid for liquids with density ρ = 1.0 Kg/dm³ and kinematic viscosity ν = 1 mm²/sec.

92SV SERIES
DIMENSIONS AND WEIGHTS AT 50 Hz, 2 POLES

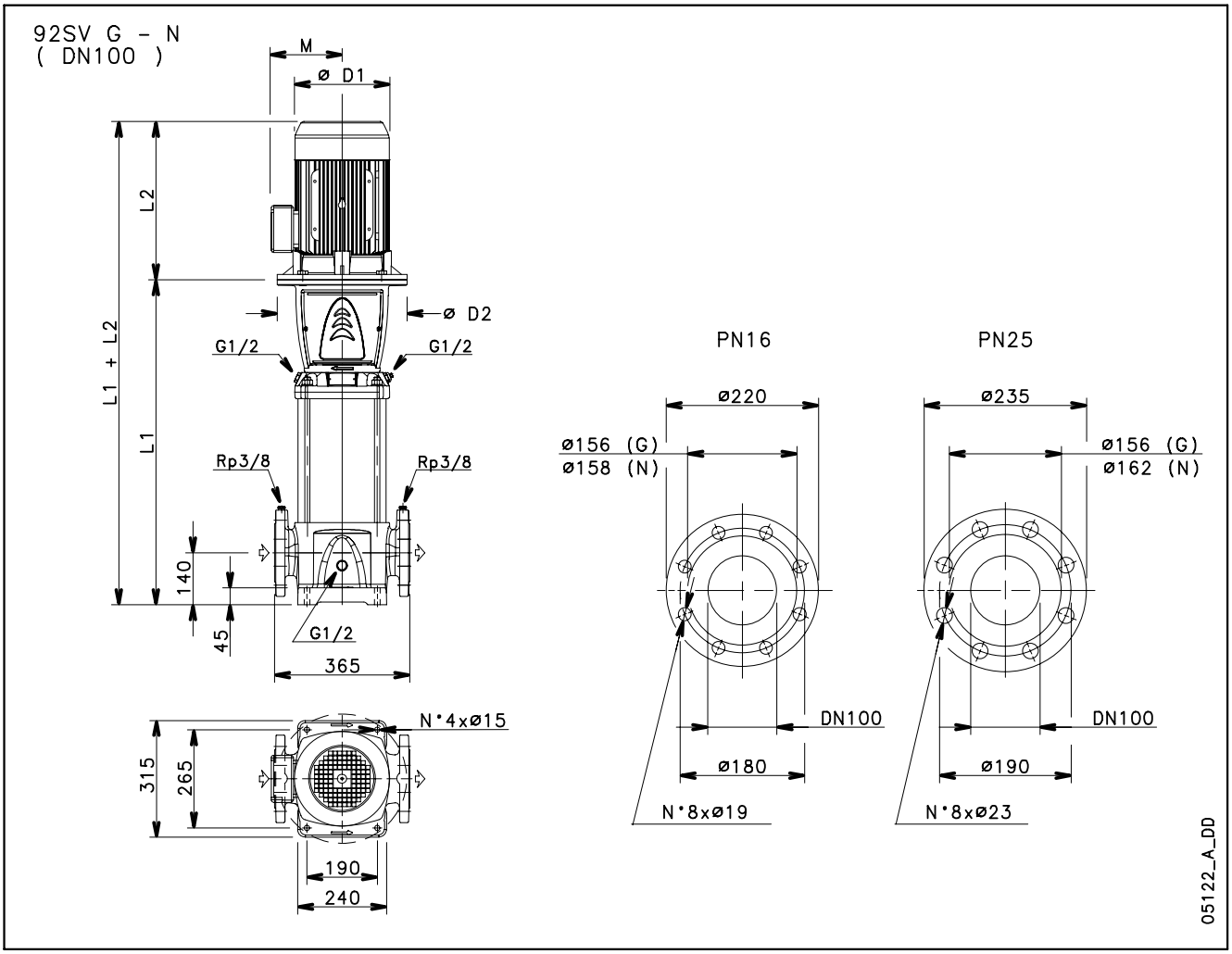

PUMP TYPE	MOTOR		DIMENSIONS (mm)						WEIGHT kg	
	kW	SIZE	L1	L2	D1	D2	M	PN	PUMP	ELECTRIC PUMP
92SV1/1A	5,5	132	574	375	214	300	168	16	71	109
92SV1	7,5	132	574	367	256	300	191	16	71	127
92SV2/2A	11	160	699	428	256	350	191	16	80	150
92SV2	15	160	699	494	313	350	240	16	80	182
92SV3/2A	18,5	160	789	494	313	350	240	16	86	197
92SV3	22	180	789	494	313	350	240	16	87	208
92SV4/2A	30	200	879	657	402	400	317	16	99	314
92SV4	30	200	879	657	402	400	317	16	99	314
92SV5/2A	37	200	969	657	402	400	317	25	107	337
92SV5	37	200	969	657	402	400	317	25	107	337
92SV6/2A	45	225	1059	746	455	450	384	25	116	472
92SV6	45	225	1059	746	455	450	384	25	116	472
92SV7/2A	45	225	1149	746	455	450	384	25	121	477

92SV SERIES
OPERATING CHARACTERISTICS AT 50 Hz, 2 POLES

92SV	~ 2900 [rpm]	ISO 9906 - Annex A

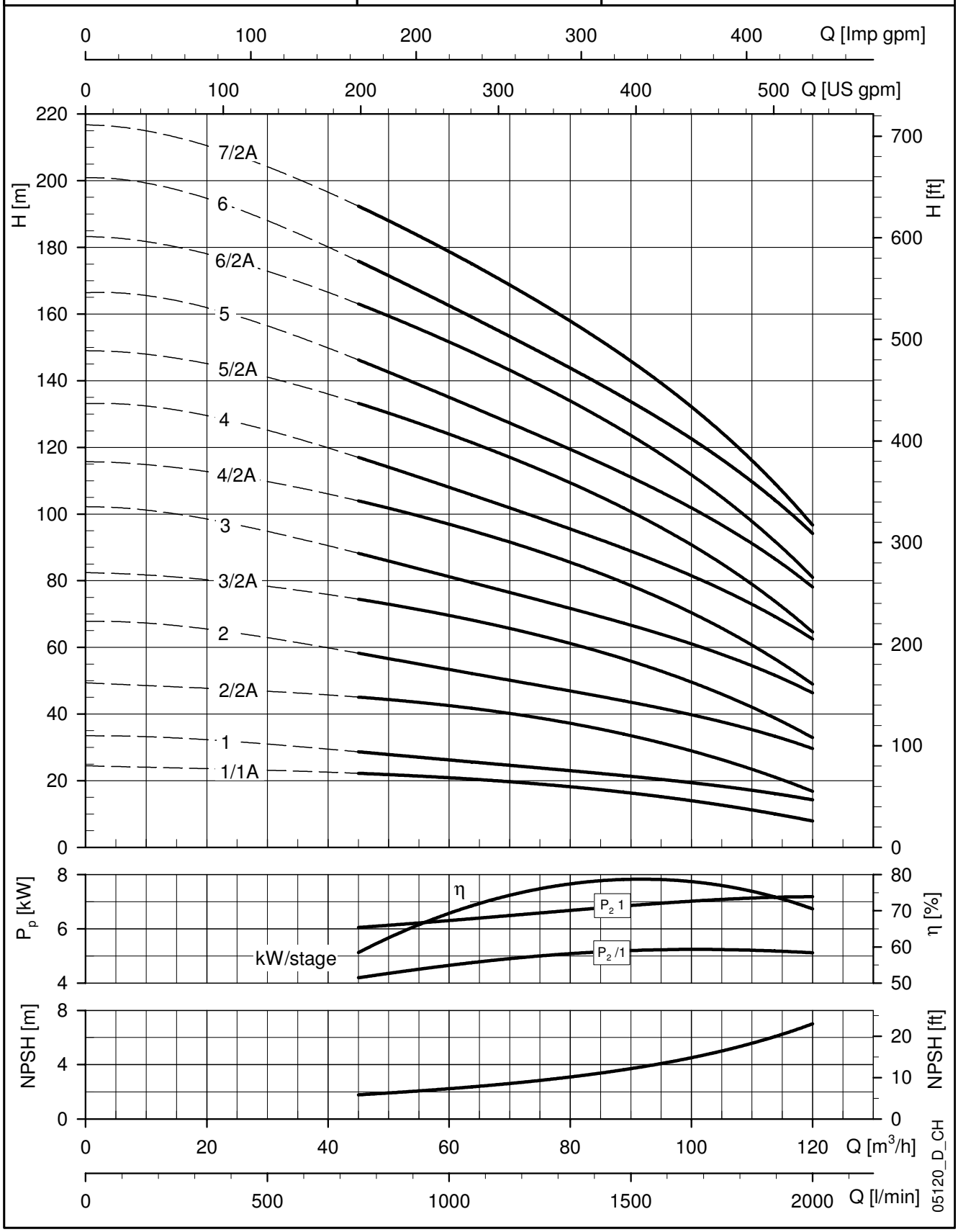

These performances are valid for liquids with density ρ = 1.0 Kg/dm³ and kinematic viscosity ν = 1 mm²/sec.

125SV SERIES
DIMENSIONS AND WEIGHTS AT 50 Hz, 2 POLES

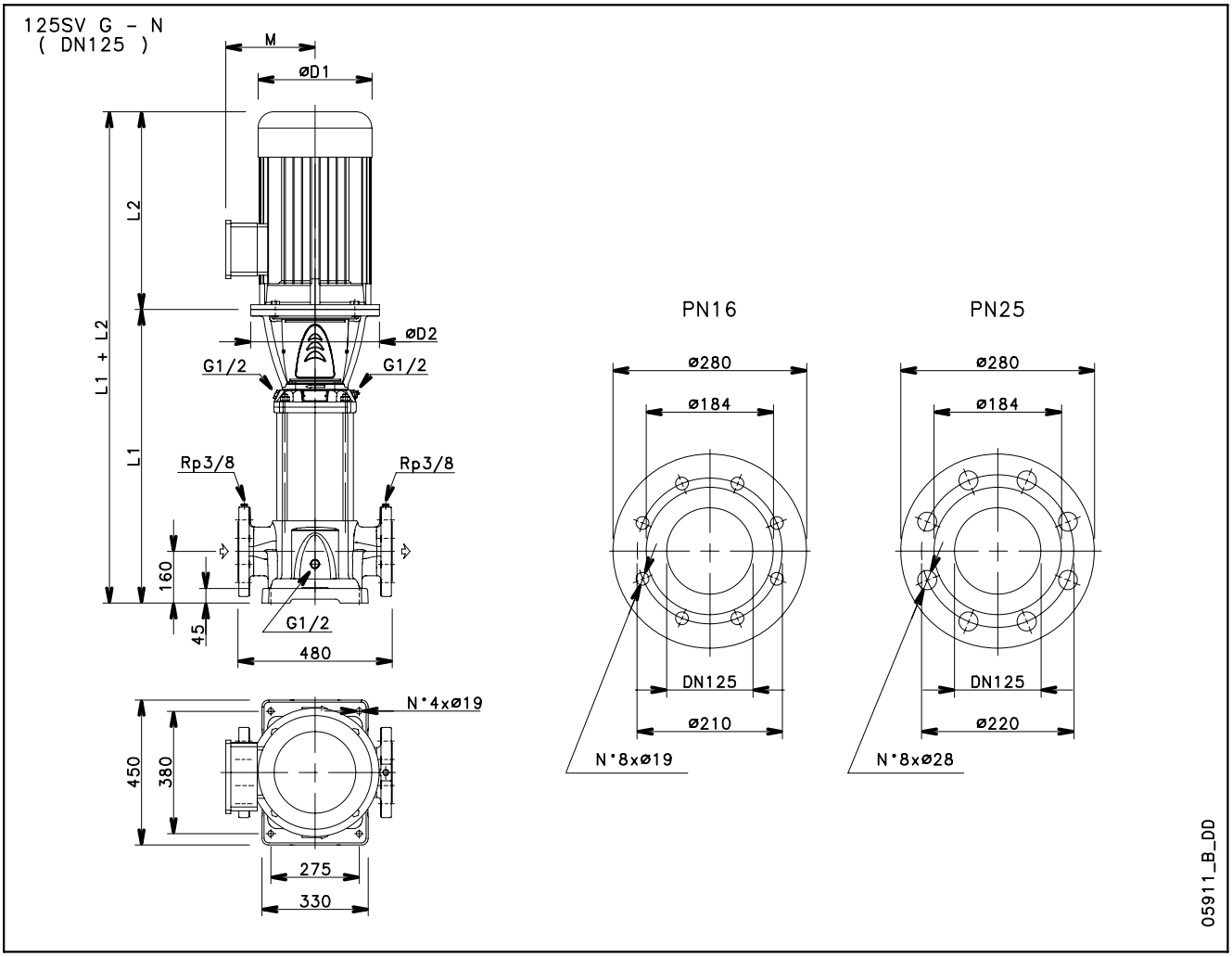

PUMP TYPE	MOTOR		DIMENSIONS (mm)						WEIGHT kg	
	kW	SIZE	L1	L2	D1	D2	M	PN	PUMP	ELECTRIC PUMP
125SV1	7,5	132	693	367	256	300	191	16	116	172
125SV2	15	160	878	494	313	350	240	16	131	233
125SV3	22	180	1028	494	313	350	240	16	143	265
125SV4	30	200	1178	657	402	400	317	16	161	376
125SV5	37	200	1328	657	402	400	317	16	172	402
125SV6	45	225	1478	746	455	450	384	16	187	543
125SV7	55	250	1658	825	486	550	402	25	216	666
125SV8/2A	55	250	1808	825	486	550	402	25	229	679

125sv-2p50-en_b_td

125SV SERIES
OPERATING CHARACTERISTICS AT 50 Hz, 2 POLES

125SV	~ 2900 [rpm]	ISO 9906 - Annex A

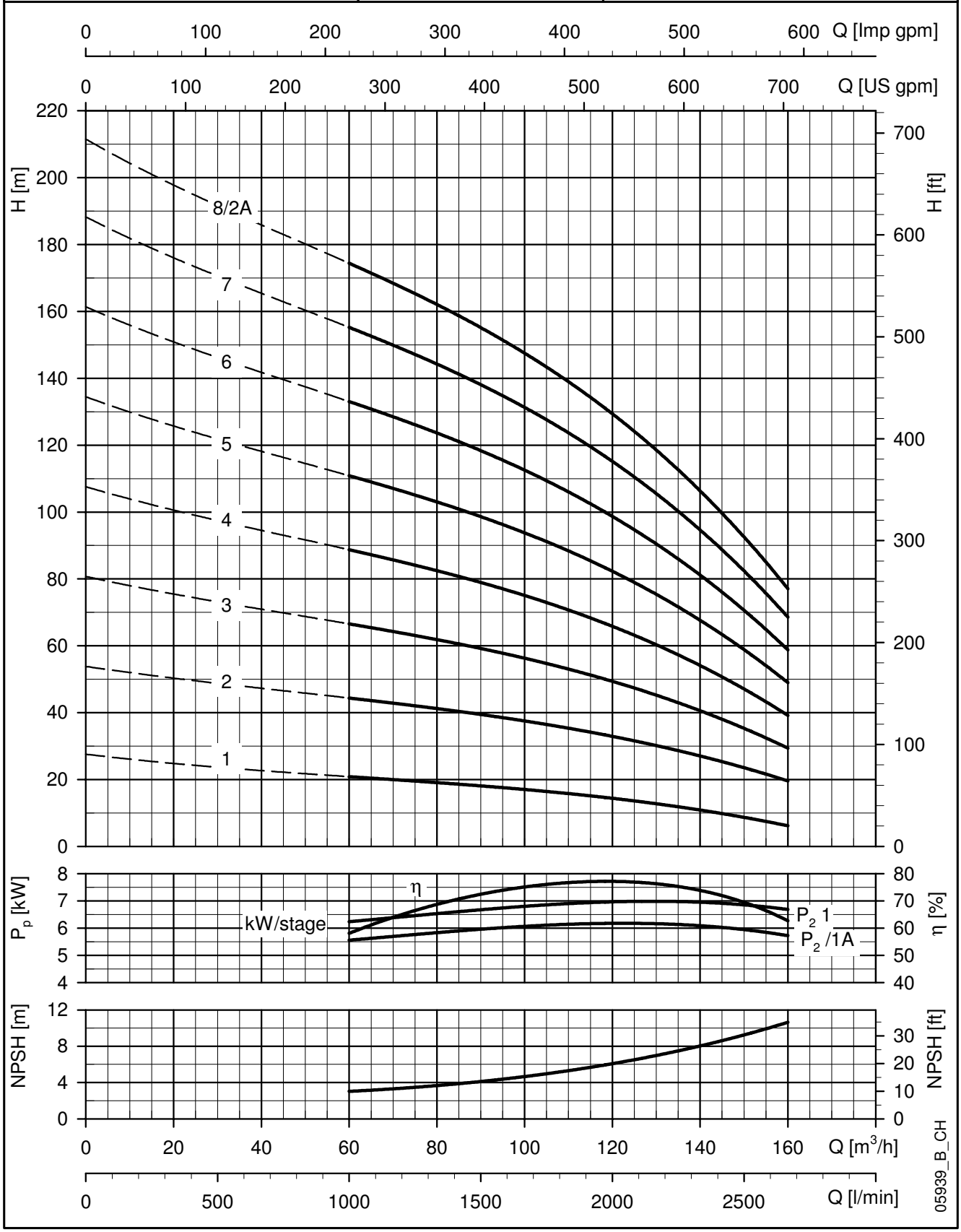

These performances are valid for liquids with density ρ = 1.0 Kg/dm^3 and kinematic viscosity ν = 1 mm^2/sec.

ACCESSORIES

Dimensions of counterflanges 52

Dimensions of Victaulic®, Clamp couplings 53

DIMENSIONS OF OVAL COUNTERFLANGES (T SV)

PUMP TYPE	DN	ø C	DIMENSIONS (mm) A	B	D	H	HOLES ø F	N°	PN
1-3SVT	25	Rp 1	75	12	100	22	11	2	16
5SVT	32	Rp 1¼	75	12	100	22	11	2	16
10SVT	40	Rp 1½	100	15	132	25	14	2	16
15-22SVT	50	Rp 2	100	15	132	25	14	2	16

1-22sv-ctf-ovali-en_a_td

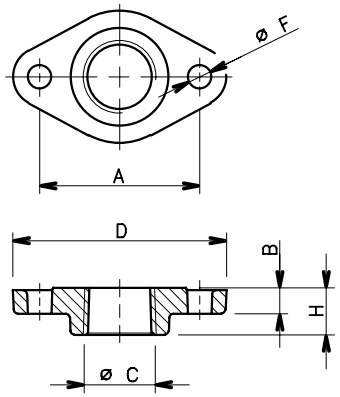

04429_B_DD

Standard supply (included with the pump)
- AISI 304L stainless steel (T versions).

DIMENSIONS OF ROUND THREADED COUNTERFLANGES (F, N, R, G SV) ACCORDING TO EN 1092-1

PUMP TYPE	DN	ø C	DIMENSIONS (mm) ø A	B	ø D	H	HOLES ø F	N°	PN
1-3SV	25	Rp 1	85	10	115	16	14	4	25
5SV	32	Rp 1¼	100	13	140	16	18	4	25
10SV	40	Rp 1½	110	14	150	19	18	4	25
15-22SV	50	Rp 2	125	16	165	24	18	4	25
33SV	65	Rp 2½	145	16	185	23	18	4	16
46SV	80	Rp 3	160	17	200	27	18	8	16
66SV-92SV	100	Rp 4	180	18	220	31	18	8	16

1-92sv-ctf-tonde-f-en_a_td

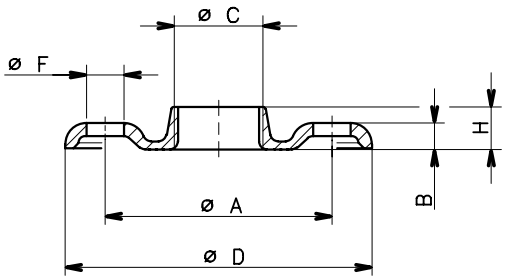

04430_B_DD

Round counterflanges Kit available on request:
Kit containing 2 counterflanges with bolts and gaskets.
- threaded, galvanized steel (F, R, G versions).
- threaded, AISI 316L stainless steel (N versions).

DIMENSIONS OF WELD-ON ROUND COUNTERFLANGES (G, N SV) ACCORDING TO EN 1092-1

PUMP TYPE	DN	ø C	DIMENSIONS (mm) ø A	B	ø D	HOLES ø F	N°	PN
33SV	65	77	145	18	185	18	4	16
46SV	80	90	160	20	200	18	8	16
66SV-92SV	100	115,5	180	22	220	18	8	16
125SV	125	141	210	24	250	18	8	16
33SV	65	77	145	24	185	18	8	25-40
46SV	80	90	160	26	200	18	8	25-40
66SV-92SV	100	115,5	190	26	235	22	8	25-40
125SV	125	141	220	28	270	25	8	25-40

33-125sv-ctf-tonde-s-en_a_td

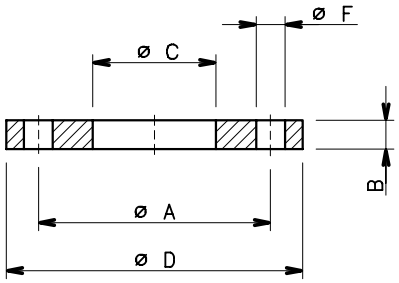

04431_A_DD

Round counterflanges Kit available on request:
Kit containing 2 counterflanges with bolts and gaskets.
- weld-on counterflanges, galvanized steel (G versions).
- weld-on counterflanges, AISI 316L stainless steel (N versions).

DIMENSIONS OF VICTAULIC® COUPLINGS (V SV)

WELD-ON SLEEVES

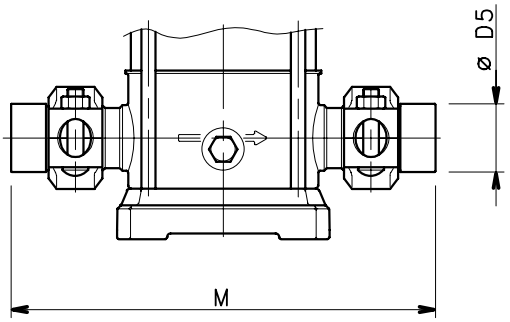

THREADED SLEEVES

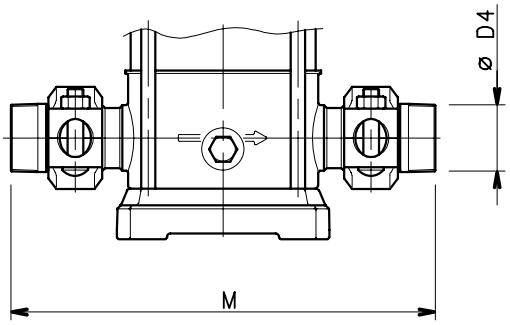

PUMP TYPE	ø D4	DIMENSIONS (mm) ø D5	M
1-3-5SV V	R 1¼	42,2	320
10-15-22SV V	R 2	60,3	378

1-22sv-giunti-vict-en_a_td

04427_B_DD

Victaulic® couplings kit available on request:
Victaulic® coupling with AISI 316L stainless steel weld-on or threaded sleeve, plus EPDM or FPM gasket.
Kits are available for the single version (1 coupling) or double version (2 couplings).

DIMENSIONS OF CLAMP COUPLINGS (C SV)

WELD-ON SLEEVES

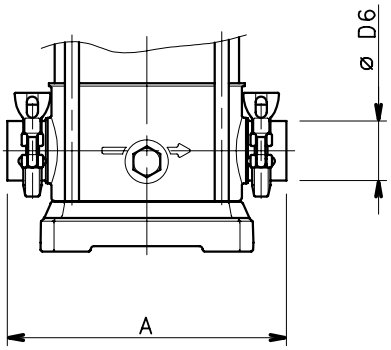

THREADED SLEEVES

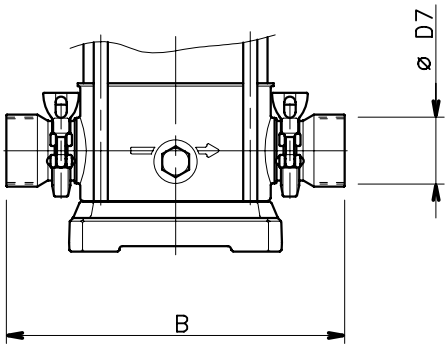

PUMP TYPE	DIMENSIONS (mm) A	B	ø D6	ø D7
1-3-5SV C	208	245	35	Rp 1¼
10-15-22SV C	248	301	53	Rp 2

1-22sv-giunti-clamp-en_a_td

04426_B_DD

Clamp couplings kit available on request:
Kit containing 2 Clamp couplings with AISI 316L stainless steel weld-on or threaded sleeve, plus EPDM or FPM gasket. Coupling shape and dimensions according to DIN 32676.

OTHER ACCESSORIES:

- **Dry running sensor**
Optical sensor for detecting the lack of water in order to prevent damage deriving from dry running.
This accessory can be applied at the filling tap.

- **i-ALERT™**
Patented i-ALERT™ monitor continuously measures vibration to support optimum performance.
Available **on request** on pumps < 7,5 kW (10 HP).

SPECIAL VERSIONS ON REQUEST

More and more customers require specific solutions for satisfying particular application requirements.
To meet their needs, Lowara offers a series of variants for personalising the e-SV pumps.

- **High pressure pump**:
  the SV pump was especially designed to withstand maximum operating pressures of 40 bar. In case of elevated input pressures, it can be used as a single pump or in a system with 2 pumps connected in series and reach heads of over 400 metres.

- **Horizontal version:**
  the SV pump is supplied with motor and pump support brackets for specific applications requiring horizontal assembly.

- **Version with low NPSH:**
  the SV pump was especially designed for boiler charging applications with an elevated risk of cavitation.

- **High temperature version:**
  the SV pump was especially developed to operate with water at high temperatures (up to 150°C).

- **Clean & Dry version:**
  the SV pump is produced with specific modifications for applications requiring elevated levels of hygiene.

- **Passivated and electro-polished version:**
  all SV pump components are passivated and electro-polished in order to reduce the risk of corrosion and to comply with specific hygiene requirements.

- **Version with stainless steel base:**
  the SV pump can be supplied with a stainless steel base for applications in aggressive conditions.

- **Motors:**
  - 4-pole motor.
  - Motor with anti-condensate option for applications in damp conditions.
  - Motor with overheating protection integrated: thermal switches or PTC sensors.
  - ATEX motor for operating in explosive atmospheres.
  - The direction of the motor terminal block can be adjusted.
  - Motor protected to IP65.
  - Special voltages.

- **Elastomers:**
  as well as the EPDM elastomers used in the standard version, other materials are available to satisfy specific customer requirements.

TECHNICAL APPENDIX

NPSH

The minimum operating values that can be reached at the pump suction end are limited by the onset of cavitation.

Cavitation is the formation of vapour-filled cavities within liquids where the pressure is locally reduced to a critical value, or where the local pressure is equal to, or just below the vapour pressure of the liquid.

The vapour-filled cavities flow with the current and when they reach a higher pressure area the vapour contained in the cavities condenses. The cavities collide, generating pressure waves that are transmitted to the walls. These, being subjected to stress cycles, gradually become deformed and yield due to fatigue. This phenomenon, characterized by a metallic noise produced by the hammering on the pipe walls, is called incipient cavitation.

The damage caused by cavitation may be magnified by electrochemical corrosion and a local rise in temperature due to the plastic deformation of the walls. The materials that offer the highest resistance to heat and corrosion are alloy steels, especially austenitic steel. The conditions that trigger cavitation may be assessed by calculating the total net suction head, referred to in technical literature with the acronym NPSH (Net Positive Suction Head).

The NPSH represents the total energy (expressed in m.) of the liquid measured at suction under conditions of incipient cavitation, excluding the vapour pressure (expressed in m.) that the liquid has at the pump inlet.

To find the static height hz at which to install the machine under safe conditions, the following formula must be verified:

hp + hz ≥ (NPSHr + 0.5) + hf + hpv ①

where:

hp is the absolute pressure applied to the free liquid surface in the suction tank, expressed in m. of liquid; hp is the quotient between the barometric pressure and the specific weight of the liquid.

hz is the suction lift between the pump axis and the free liquid surface in the suction tank, expressed in m.; hz is negative when the liquid level is lower than the pump axis.

hf is the flow resistance in the suction line and its accessories, such as: fittings, foot valve, gate valve, elbows, etc.

hpv is the vapour pressure of the liquid at the operating temperature, expressed in m. of liquid. hpv is the quotient between the Pv vapour pressure and the liquid's specific weight.

0,5 is the safety factor.

The maximum possible suction head for installation depends on the value of the atmospheric pressure (i.e. the elevation above sea level at which the pump is installed) and the temperature of the liquid.

To help the user, with reference to water temperature (4° C) and to the elevation above sea level, the following tables show the drop in hydraulic pressure head in relation to the elevation above sea level, and the suction loss in relation to temperature.

Water temperature (°C)	20	40	60	80	90	110	120
Suction loss (m)	0,2	0,7	2,0	5,0	7,4	15,4	21,5

Elevation above sea level (m)	500	1000	1500	2000	2500	3000
Suction loss (m)	0,55	1,1	1,65	2,2	2,75	3,3

Friction loss is shown in the tables at pages 58-59 of this catalogue. To reduce it to a minimum, especially in cases of high suction head (over 4-5 m.) or within the operating limits with high flow rates, we recommend using a suction line having a larger diameter than that of the pump's suction port.
It is always a good idea to position the pump as close as possible to the liquid to be pumped.

Make the following calculation:

Liquid: water at ~15°C $\gamma = 1$ kg/dm^3
Flow rate required: 25 m^3/h
Head for required delivery: 70 m.
Suction lift: 3,5 m.
The selection is an 33SVG075T pump whose NPSH required value is, at 25 m^3/h, di 2 m.

For water at 15 °C

hp = Pa / γ = 10,33m, hpv = Pv / γ = 0,174m (0,01701 bar)

The Hf flow resistance in the suction line with foot valves is ~ 1,2 m.
By substituting the parameters in formula ① with the numeric values above, we have:

$10,33 + (-3,5) \geq (2 + 0,5) + 1,2 + 0,17$

from which we have: $6,8 > 3,9$

The relation is therefore verified.

VAPOUR PRESSURE
VAPOUR PRESSURE ps AND ρ DENSITY OF WATER TABLE

t	T	ps	ρ
°C	K	bar	kg/dm^3
0	273,15	0,00611	0,9998
1	274,15	0,00657	0,9999
2	275,15	0,00706	0,9999
3	276,15	0,00758	0,9999
4	277,15	0,00813	1,0000
5	278,15	0,00872	1,0000
6	279,15	0,00935	1,0000
7	280,15	0,01001	0,9999
8	281,15	0,01072	0,9999
9	282,15	0,01147	0,9998
10	283,15	0,01227	0,9997
11	284,15	0,01312	0,9997
12	285,15	0,01401	0,9996
13	286,15	0,01497	0,9994
14	287,15	0,01597	0,9993
15	288,15	0,01704	0,9992
16	289,15	0,01817	0,9990
17	290,15	0,01936	0,9988
18	291,15	0,02062	0,9987
19	292,15	0,02196	0,9985
20	293,15	0,02337	0,9983
21	294,15	0,24850	0,9981
22	295,15	0,02642	0,9978
23	296,15	0,02808	0,9976
24	297,15	0,02982	0,9974
25	298,15	0,03166	0,9971
26	299,15	0,03360	0,9968
27	300,15	0,03564	0,9966
28	301,15	0,03778	0,9963
29	302,15	0,04004	0,9960
30	303,15	0,04241	0,9957
31	304,15	0,04491	0,9954
32	305,15	0,04753	0,9951
33	306,15	0,05029	0,9947
34	307,15	0,05318	0,9944
35	308,15	0,05622	0,9940
36	309,15	0,05940	0,9937
37	310,15	0,06274	0,9933
38	311,15	0,06624	0,9930
39	312,15	0,06991	0,9927
40	313,15	0,07375	0,9923
41	314,15	0,07777	0,9919
42	315,15	0,08198	0,9915
43	316,15	0,09639	0,9911
44	317,15	0,09100	0,9907
45	318,15	0,09582	0,9902
46	319,15	0,10086	0,9898
47	320,15	0,10612	0,9894
48	321,15	0,11162	0,9889
49	322,15	0,11736	0,9884
50	323,15	0,12335	0,9880
51	324,15	0,12961	0,9876
52	325,15	0,13613	0,9871
53	326,15	0,14293	0,9862
54	327,15	0,15002	0,9862

t	T	ps	ρ
°C	K	bar	kg/dm^3
55	328,15	0,15741	0,9857
56	329,15	0,16511	0,9852
57	330,15	0,17313	0,9846
58	331,15	0,18147	0,9842
59	332,15	0,19016	0,9837
60	333,15	0,1992	0,9832
61	334,15	0,2086	0,9826
62	335,15	0,2184	0,9821
63	336,15	0,2286	0,9816
64	337,15	0,2391	0,9811
65	338,15	0,2501	0,9805
66	339,15	0,2615	0,9799
67	340,15	0,2733	0,9793
68	341,15	0,2856	0,9788
69	342,15	0,2984	0,9782
70	343,15	0,3116	0,9777
71	344,15	0,3253	0,9770
72	345,15	0,3396	0,9765
73	346,15	0,3543	0,9760
74	347,15	0,3696	0,9753
75	348,15	0,3855	0,9748
76	349,15	0,4019	0,9741
77	350,15	0,4189	0,9735
78	351,15	0,4365	0,9729
79	352,15	0,4547	0,9723
80	353,15	0,4736	0,9716
81	354,15	0,4931	0,9710
82	355,15	0,5133	0,9704
83	356,15	0,5342	0,9697
84	357,15	0,5557	0,9691
85	358,15	0,5780	0,9684
86	359,15	0,6011	0,9678
87	360,15	0,6249	0,9671
88	361,15	0,6495	0,9665
89	362,15	0,6749	0,9658
90	363,15	0,7011	0,9652
91	364,15	0,7281	0,9644
92	365,15	0,7561	0,9638
93	366,15	0,7849	0,9630
94	367,15	0,8146	0,9624
95	368,15	0,8453	0,9616
96	369,15	0,8769	0,9610
97	370,15	0,9094	0,9602
98	371,15	0,9430	0,9596
99	372,15	0,9776	0,9586
100	373,15	1,0133	0,9581
102	375,15	1,0878	0,9567
104	377,15	1,1668	0,9552
106	379,15	1,2504	0,9537
108	381,15	1,3390	0,9522
110	383,15	1,4327	0,9507
112	385,15	1,5316	0,9491
114	387,15	1,6362	0,9476
116	389,15	1,7465	0,9460
118	391,15	1,8628	0,9445

t	T	ps	ρ
°C	K	bar	kg/dm^3
120	393,15	1,9854	0,9429
122	395,15	2,1145	0,9412
124	397,15	2,2504	0,9396
126	399,15	2,3933	0,9379
128	401,15	2,5435	0,9362
130	403,15	2,7013	0,9346
132	405,15	2,867	0,9328
134	407,15	3,041	0,9311
136	409,15	3,223	0,9294
138	411,15	3,414	0,9276
140	413,15	3,614	0,9258
145	418,15	4,155	0,9214
155	428,15	5,433	0,9121
160	433,15	6,181	0,9073
165	438,15	7,008	0,9024
170	433,15	7,920	0,8973
175	448,15	8,924	0,8921
180	453,15	10,027	0,8869
185	458,15	11,233	0,8815
190	463,15	12,551	0,8760
195	468,15	13,987	0,8704
200	473,15	15,550	0,8647
205	478,15	17,243	0,8588
210	483,15	19,077	0,8528
215	488,15	21,060	0,8467
220	493,15	23,198	0,8403
225	498,15	25,501	0,8339
230	503,15	27,976	0,8273
235	508,15	30,632	0,8205
240	513,15	33,478	0,8136
245	518,15	36,523	0,8065
250	523,15	39,776	0,7992
255	528,15	43,246	0,7916
260	533,15	46,943	0,7839
265	538,15	50,877	0,7759
270	543,15	55,058	0,7678
275	548,15	59,496	0,7593
280	553,15	64,202	0,7505
285	558,15	69,186	0,7415
290	563,15	74,461	0,7321
295	568,15	80,037	0,7223
300	573,15	85,927	0,7122
305	578,15	92,144	0,7017
310	583,15	98,70	0,6906
315	588,15	105,61	0,6791
320	593,15	112,89	0,6669
325	598,15	120,56	0,6541
330	603,15	128,63	0,6404
340	613,15	146,05	0,6102
350	623,15	165,35	0,5743
360	633,15	186,75	0,5275
370	643,15	210,54	0,4518
374,15	647,30	221,20	0,3154

G-at_npsh_b_sc

TABLE OF FLOW RESISTANCE IN 100 m OF STRAIGHT CAST IRON PIPELINE (HAZEN-WILLIAMS FORMULA C=100)

FLOW RATE			NOMINAL DIAMETER in mm and inches																
m^3/h	l/min		15 1/2"	20 3/4"	25 1"	32 1 1/4"	40 1 1/2"	50 2	65 2 1/2"	80 3"	100 4"	125 5"	150 6"	175 7"	200 8"	250 10"	300 12"	350 14"	400 16"
0,6	10	v	0,94	0,53	0,34	0,21	0,13												
		hr	16	3,94	1,33	0,40	0,13												
0,9	15	v	1,42	0,80	0,51	0,31	0,20												
		hr	33,9	8,35	2,82	0,85	0,29												
1,2	20	v	1,89	1,06	0,68	0,41	0,27	0,17											
		hr	57,7	14,21	4,79	1,44	0,49	0,16											
1,5	25	v	2,36	1,33	0,85	0,52	0,33	0,21											
		hr	87,2	21,5	7,24	2,18	0,73	0,25											
1,8	30	v	2,83	1,59	1,02	0,62	0,40	0,25											
		hr	122	30,1	10,1	3,05	1,03	0,35											
2,1	35	v	3,30	1,86	1,19	0,73	0,46	0,30											
		hr	162	40,0	13,5	4,06	1,37	0,46											
2,4	40	v		2,12	1,36	0,83	0,53	0,34	0,20										
		hr		51,2	17,3	5,19	1,75	0,59	0,16										
3	50	v		2,65	1,70	1,04	0,66	0,42	0,25										
		hr		77,4	26,1	7,85	2,65	0,89	0,25										
3,6	60	v		3,18	2,04	1,24	0,80	0,51	0,30										
		hr		108	36,6	11,0	3,71	1,25	0,35										
4,2	70	v		3,72	2,38	1,45	0,93	0,59	0,35										
		hr		144	48,7	14,6	4,93	1,66	0,46										
4,8	80	v		4,25	2,72	1,66	1,06	0,68	0,40										
		hr		185	62,3	18,7	6,32	2,13	0,59										
5,4	90	v			3,06	1,87	1,19	0,76	0,45	0,30									
		hr			77,5	23,3	7,85	2,65	0,74	0,27									
6	100	v			3,40	2,07	1,33	0,85	0,50	0,33									
		hr			94,1	28,3	9,54	3,22	0,90	0,33									
7,5	125	v			4,25	2,59	1,66	1,06	0,63	0,41									
		hr			142	42,8	14,4	4,86	1,36	0,49									
9	150	v				3,11	1,99	1,27	0,75	0,50	0,32								
		hr				59,9	20,2	6,82	1,90	0,69	0,23								
10,5	175	v				3,63	2,32	1,49	0,88	0,58	0,37								
		hr				79,7	26,9	9,07	2,53	0,92	0,31								
12	200	v				4,15	2,65	1,70	1,01	0,66	0,42								
		hr				102	34,4	11,6	3,23	1,18	0,40								
15	250	v				5,18	3,32	2,12	1,26	0,83	0,53	0,34							
		hr				154	52,0	17,5	4,89	1,78	0,60	0,20							
18	300	v					3,98	2,55	1,51	1,00	0,64	0,41							
		hr					72,8	24,6	6,85	2,49	0,84	0,28							
24	400	v					5,31	3,40	2,01	1,33	0,85	0,54	0,38						
		hr					124	41,8	11,66	4,24	1,43	0,48	0,20						
30	500	v					6,63	4,25	2,51	1,66	1,06	0,68	0,47						
		hr					187	63,2	17,6	6,41	2,16	0,73	0,30						
36	600	v						5,10	3,02	1,99	1,27	0,82	0,57	0,42					
		hr						88,6	24,7	8,98	3,03	1,02	0,42	0,20					
42	700	v						5,94	3,52	2,32	1,49	0,95	0,66	0,49					
		hr						118	32,8	11,9	4,03	1,36	0,56	0,26					
48	800	v						6,79	4,02	2,65	1,70	1,09	0,75	0,55					
		hr						151	42,0	15,3	5,16	1,74	0,72	0,34					
54	900	v						7,64	4,52	2,99	1,91	1,22	0,85	0,62					
		hr						188	52,3	19,0	6,41	2,16	0,89	0,42					
60	1000	v							5,03	3,32	2,12	1,36	0,94	0,69	0,53				
		hr							63,5	23,1	7,79	2,63	1,08	0,51	0,27				
75	1250	v							6,28	4,15	2,65	1,70	1,18	0,87	0,66				
		hr							96,0	34,9	11,8	3,97	1,63	0,77	0,40				
90	1500	v							7,54	4,98	3,18	2,04	1,42	1,04	0,80				
		hr							134	48,9	16,5	5,57	2,29	1,08	0,56				
105	1750	v							8,79	5,81	3,72	2,38	1,65	1,21	0,93				
		hr							179	65,1	21,9	7,40	3,05	1,44	0,75				
120	2000	v								6,63	4,25	2,72	1,89	1,39	1,06	0,68			
		hr								83,3	28,1	9,48	3,90	1,84	0,96	0,32			
150	2500	v								8,29	5,31	3,40	2,36	1,73	1,33	0,85			
		hr								126	42,5	14,3	5,89	2,78	1,45	0,49			
180	3000	v									6,37	4,08	2,83	2,08	1,59	1,02	0,71		
		hr									59,5	20,1	8,26	3,90	2,03	0,69	0,28		
210	3500	v									7,43	4,76	3,30	2,43	1,86	1,19	0,83		
		hr									79,1	26,7	11,0	5,18	2,71	0,91	0,38		
240	4000	v									8,49	5,44	3,77	2,77	2,12	1,36	0,94		
		hr									101	34,2	14,1	6,64	3,46	1,17	0,48		
300	5000	v										6,79	4,72	3,47	2,65	1,70	1,18		
		hr										51,6	21,2	10,0	5,23	1,77	0,73		
360	6000	v										8,15	5,66	4,16	3,18	2,04	1,42		
		hr										72,3	29,8	14,1	7,33	2,47	1,02		
420	7000	v											6,61	4,85	3,72	2,38	1,65	1,21	
		hr											39,6	18,7	9,75	3,29	1,35	0,64	
480	8000	v											7,55	5,55	4,25	2,72	1,89	1,39	
		hr											50,7	23,9	12,49	4,21	1,73	0,82	
540	9000	v											8,49	6,24	4,78	3,06	2,12	1,56	1,19
		hr											63,0	29,8	15,5	5,24	2,16	1,02	0,53
600	10000	v												6,93	5,31	3,40	2,36	1,73	1,33
		hr												36,2	18,9	6,36	2,62	1,24	0,65

The hr values must be multiplied by:
0,71 for galvanized or painted steel pipes
0,54 for stainless steel or copper pipes
0,47 for PVC or PE pipes

G-at-pct-en_a_th

hr = flow resistance for 100 m of straight pipeline (m)
V = water speed (m/s)

FLOW RESISTANCE
TABLE OF FLOW RESISTANCE IN BENDS, VALVES AND GATES

The flow resistance is calculated using the equivalent pipeline length method according to the table below:

ACCESSORY TYPE	DN											
	25	32	40	50	65	80	100	125	150	200	250	300
	Equivalent pipeline length (m)											
45° bend	0,2	0,2	0,4	0,4	0,6	0,6	0,9	1,1	1,5	1,9	2,4	2,8
90° bend	0,4	0,6	0,9	1,1	1,3	1,5	2,1	2,6	3,0	3,9	4,7	5,8
90° smooth bend	0,4	0,4	0,4	0,6	0,9	1,1	1,3	1,7	1,9	2,8	3,4	3,9
Union tee or cross	1,1	1,3	1,7	2,1	2,6	3,2	4,3	5,3	6,4	7,5	10,7	12,8
Gate	-	-	-	0,2	0,2	0,2	0,4	0,4	0,6	0,9	1,1	1,3
Non return valve	1,1	1,5	1,9	2,4	3,0	3,4	4,7	5,9	7,4	9,6	11,8	13,9

G-a-pcv-en_a_th

The table is valid for the Hazen Williams coefficient C=100 (cast iron pipework);
for steel pipework, multiply the values by 1,41;
for stainless steel, copper and coated cast iron pipework, multiply the values by 1,85;
When the **equivalent pipeline length** has been determined, the flow resistance is obtained from the table of flow resistance.
The values given are guideline values which are bound to vary slightly according to the model, especially for gate valves and non-return valves, for which it is a good idea to check the values supplied by manufacturers.

VOLUMETRIC CAPACITY

Litres per minute l/min	Cubic metres per hour m^3/h	Cubic feet per hour ft^3/h	Cubic feet per minute ft^3/min	Imp. gal. per minute Imp. gal/min	US gal. per minute Us gal./min
1,0000	0,0600	2,1189	0,0353	0,2200	**0,2642**
16,6667	**1,0000**	35,3147	0,5886	3,6662	4,4029
0,4719	0,0283	**1,0000**	0,0167	0,1038	**0,1247**
28,3168	1,6990	60,0000	**1,0000**	6,2288	7,4805
4,5461	0,2728	9,6326	0,1605	**1,0000**	1,2009
3,7854	0,2271	8,0208	0,1337	0,8327	**1,0000**

PRESSURE AND HEAD

Newton per square metre N/m^2	kilo Pascal kPa	bar bar	Pound force per square inch psi	metre of water m H_2O	millimetre of mercury mm Hg
1,0000	0,0010	1×10^{-5}	1.45×10^{-4}	1.02×10^{-4}	**0,0075**
1000,0000	**1,0000**	0,0100	0,1450	0,1020	7,5006
1×10^{5}	100,0000	**1,0000**	14,5038	10,1972	**750,0638**
6894,7570	6,8948	0,0689	**1,0000**	0,7031	**51,7151**
9806,6500	9,8067	0,0981	1,4223	**1,0000**	**73,5561**
133,3220	0,1333	0,0013	0,0193	0,0136	**1,0000**

LENGTH

millimetre mm	centimetre cm	metre m	inch in	foot ft	yard yd
1,0000	0,1000	0,0010	0,0394	0,0033	**0,0011**
10,0000	**1,0000**	0,0100	0,3937	0,0328	0,0109
1000,0000	100,0000	**1,0000**	39,3701	3,2808	**1,0936**
25,4000	2,5400	0,0254	**1,0000**	0,0833	0,0278
304,8000	30,4800	0,3048	12,0000	**1,0000**	**0,3333**
914,4000	91,4400	0,9144	36,0000	3,0000	**1,0000**

VOLUME

cubic metre m^3	litre litro	millilitre ml	imp. Gallon imp. gal.	US gallon US gal.	cubic foot ft^3
1,0000	1000,0000	1×10^{6}	219,9694	264,1720	**35,3147**
0,0010	**1,0000**	1000,0000	0,2200	0,2642	0,0353
1×10^{-6}	0,0010	**1,0000**	2.2×10^{-4}	2.642×10^{-4}	3.53×10^{-5}
0,0045	4,5461	4546,0870	**1,0000**	1,2009	0,1605
0,0038	3,7854	3785,4120	0,8327	**1,0000**	**0,1337**
0,0283	28,3168	28316,8466	6,2288	7,4805	**1,0000**

G-at_pp-en_a_sc

ITT

Lowara

ITT-Lowara (www.lowara.com), headquarters of "Residential and Commercial Water - EMEA" part of the ITT Corporation and located in Montecchio Maggiore, Vicenza - Italy, is a leading manufacturer of hydraulic pumps and water handling and control systems. It has 1.819 employees in Europe, 675 operating in Italy. In 2009 its consolidated sales totalled about 286 million € , or over 396 million $.
ITT Corporation is a high-technology engineering and manufacturing company operating on all seven continents in three vital markets: water and fluids management, global defense and security, and motion and flow control. With a heritage of innovation, ITT partners with its customers to deliver extraordinary solutions that create more livable environments, provide protection and safety and connect our world. Headquartered in White Plains, N.Y., the company generated 2009 revenue of $10.9 billion.

ITT RESIDENTIAL AND COMMERCIAL WATER DIVISION - EMEA

Headquarters

LOWARA S.r.l. Unipersonale
Via Dott. Lombardi, 14
36075 Montecchio Maggiore
Vicenza - Italy
Tel. (+39) 0444 707111
Fax (+39) 0444 492166
e-mail: lowara.mkt@itt.com
http: //www.lowara.com

AUSTRIA
ITT AUSTRIA GmbH
A-2000 STOCKERAU
Ernst Vogel-Straße 2
Tel. (+43) 02266 604
Fax (+43) 02266 65311
e-mail: info.ittaustria@itt.com
http://www.ittaustria.com

FRANCE
ITT FRANCE
Parc de l'ile
29 rue du Port
92022 Nanterre Cedex
Tel. (+33) 02 47 88 17 17
Fax (+33) 02 47 88 17 00
e-mail: lowarafr.info@itt.com
http://www.lowara.fr

GERMANY
ITT LOWARA DEUTSCHLAND GmbH
Biebigheimer Straße 12
D-63762 Großostheim
Tel. (+49) 0 60 26 9 43 - 0
Fax (+49) 0 60 26 9 43 - 2 10
e-mail: info.lowarade@itt.com
http://www.lowara.de

IRELAND
ITT IRELAND
50 Broomhill Close
Airton Road
Tallaght
DUBLIN 24
Tel. (+353) 01 4524444
Fax (+353) 01 4524795
e-mail: lowara.ireland@itt.com -
http://www.lowara.ie

NEDERLAND
LOWARA NEDERLAND B.V.
Zandweistraat 22
4181 CG Waardenburg
Tel. (+31) 0418 65 50 60
Fax (+31) 0418 65 50 61
e-mail: sales.nl@itt.com
http://www.lowara.nl

POLAND
LOWARA VOGEL POLSKA Sp. z o.o.
PL 57-100 Strzelin
ul. Kazimierza Wielkiego 5
Tel. (+48) 071 769 3900 - Fax (+48) 071 769 3909
e-mail: info.lowarapl@itt.com -
http://www.lowara-vogel.pl

PORTUGAL
ITT PORTUGAL, Lda
Praçeta da Castanheira, 38
4475-019 Barca
Tel. (+351) 22 9478550
Fax (+351) 22 9478570
e-mail: info.pt@itt.com
http://www.itt.pt

RUSSIA
LOWARA RUSSIA
Kalanchevskaya st. 11 b.2, off. 334
107078 Moscow
Tel. (+7) 495 631 55 15
Fax (+7) 495 631 59 72
info.lowararu@itt.com - www.lowara.ru

UK
LOWARA UK LTD.
Millwey Rise, Industrial Estate
Axminster - Devon EX13 5HU UK
Tel. (+44) 01297 630200
Fax (+44) 01297 630270
e-mail: lowaraukenquiries@itt.com
http://www.lowara.co.uk

For additional addresses, please visit
www.lowara.com

cod. 191002031 W 12/10

Lowara reserves the right to make modifications without prior notice.

RECYCLED PAPER 100%

Engineered for life